Defender

Electrical Circuit Diagrams

Elektrische Circuitdiagrammen

Schémas électriques

Elektrische Schaltpläne

Schemi elettrici

Esquemas de Circuitos Eléctricos

Diagramas dos Circuitos Eléctricos

LAND ROVER

CONTENTS

POWER DISTRIBUTION **1.1**

EARTH DISTRIBUTION **2.1**

ANTI-THEFT ALARM **3.1**

ENGINE IMMOBILISATION

Td5 ..... **3.3**

DIAGNOSTIC SOCKET **10.1**

STARTING AND CHARGING

Td5 ..... **15.1**

ENGINE MANAGEMENT

Td5 ..... **20.1**

FUEL PUMP

Td5 ..... **30.1**

ANTI-LOCK BRAKING SYSTEM (ABS)

Td5 ..... **35.1**

AIR CONDITIONING

Td5 ..... **38.1**

HEATER **39.1**

HEATED REAR WINDOW (HRW) **40.1**

WIPERS AND WASHERS **42.1**

EXTERIOR LAMPS

Brake and reverse lamps **43.1**

Head, side and number plate lamps **43.2**

Headlamp levelling **43.4**

Rear fog lamps **43.5**

INDICATORS AND HAZARDS **44.1**

INTERIOR LAMPS

90 Station Wagon **45.1**

110 Station Wagon **45.2**

90 / 110 Hard Top **45.3**

INTERIOR ILLUMINATION **46.1**

INSTRUMENTS **47.1**

HORNS **48.1**

CLOCK **48.2**

CIGAR LIGHTER **49.1**

ACCESSORY SOCKET **49.2**

IN-CAR ENTERTAINMENT (ICE) **50.1**

HEADER JOINTS **60.1**

SPLICE JOINTS **65.1**

© 1998 Rover Group Limited.

Published by Rover Technical Communication

COLOUR CODES
DRAADKLEURCODES
CODES DES COULEURS DES FILS
KABELFARBCODES
CODICI COLORI DEI CAVI
CÓDIGOS DE COLORES DE LOS CABLES
CÓDIGOS DAS CORES DOS FIOS

CODE COLOUR		CODE KLEUR		CODE COULEUR		CODE FARBE		CODICE COLORE		CODIGO COLOR		CÓDIGO COR	
B	BLACK	B	ZWART	B	NOIR	B	SCHWARZ	B	NERO	B	NEGRO	B	PRETO
G	GREEN	G	GROEN	G	VERT	G	GRÜN	G	VERDE	G	VERDE	G	VERDE
K	PINK	K	ROZE	K	ROSE	K	ROSA	K	ROSA	K	ROSA	K	ROSA
LG	LIGHT GREEN	LG	LICHTGROEN	LG	VERT CLAIR	LG	HELLGRÜN	LG	VERDE CHIARO	LG	VERDE CLARO	LG	VERDE CLARO
N	BROWN	N	BRUIN	N	BRUN	N	BRAUN	N	MARRONE	N	MARRON	N	CASTANHO
0	ORANGE	0	ORANJE	0	ORANGE	0	ORANGE	0	ARANCIONE	0	NARANJA	0	LARANJA
P	PURPLE	P	PAARS	P	VIOLET	P	LILA	P	PORPORA	P	PURPURA	P	ROXO
R	RED	R	ROOD	R	ROUGE	R	ROT	R	ROSSO	R	ROJO	R	VERMELHO
S	SLATE (grey)	S	LEIGRIJS	S	GRIS	S	GRAU	S	ARDESIA (grigio)	S	PIZARRA (gris)	S	CINZENTO
U	BLUE	U	BLAUW	U	BLEU	U	BLAU	U	BLU	U	AZUL	U	AZUL
W	WHITE	W	WIT	W	BLANC	W	WEISS	W	BIANCO	W	BLANC0	W	BRANCO
Y	YELLOW	Y	GEEL	Y	JAUNE	Y	GELB	Y	GIALLO	Y	AMARILLO	Y	AMARELO

©1996 Rover Group **Limited**

RCL

HOW TO USE THE CIRCUIT DIAGRAMS

All of the information in this folder is intended for use with the Electrical Reference Library booklet.

The circuit diagrams are presented with Power and Earth distribution first, followed by individual circuits for each electrical system on the car.

Power Distribution

The Power Distribution diagram shows the connections from the battery to the engine and passenger compartment fuseboxes. It also shows the internal circuitry of the fuseboxes.

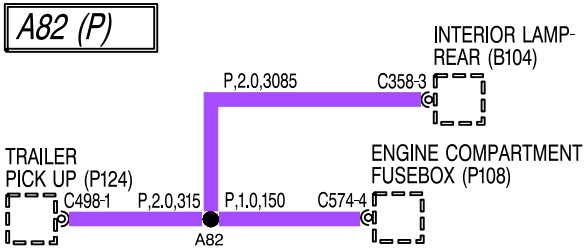

86M4227A

These fuse box details are followed by a Headers and Splices section outlining the way in which internal harness splices and header joints distribute power in the harnesses. This information should be used during diagnosis of electrical faults to check for symptoms in associated circuits and narrow down the search area.

Headers and splices

Header and splice tables present the joint(s) and wiring up to the first component. Splices are identified by a number with an alphabetical prefix and the wire colour.

The splice information shown on individual system circuits is not complete. Always refer to the splices circuit for complete information on each splice.

Wire attributes

Additional information (separated by a ',') is shown alongside the wire colour:
Wire gauge - the cross-sectional area of the wire in square millimetres. This is included to help you select the correct wire during harness repair.
Wire length (Power & Earth Distribution only) - the length of the wire in millimetres. This can be used to locate internal harness splices; look for the shortest wire between the joint and connector. For example, it can be seen that C574-4 is 150mm from joint A82.

Earth Distribution

The ground distribution section comprises a number of Headers and Splices tables. These are used in a similar manner to those in Power Distribution; to narrow the search area by checking for fault symptoms in associated circuits.

Connectors

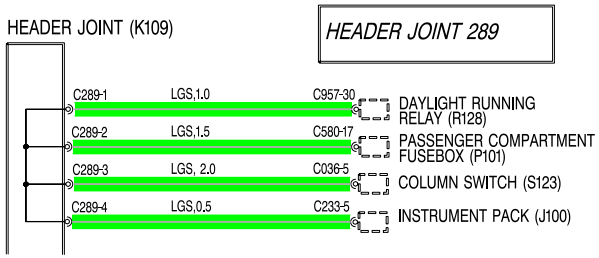

86M4228A

Header joints are identified by their corresponding connector number with a numbered suffix to indicate the pin-out detail of the wire, i.e. C289-1 identifies connector 289, pin number 1. Wire insulation colour is identified in the normal way. Where wires have a predominant colour with a secondary colour stripe, the main colour is identified first, i.e. LGS - Light Green with a Slate stripe.

Line Types

86M4229A

This means the wire connects to another circuit.

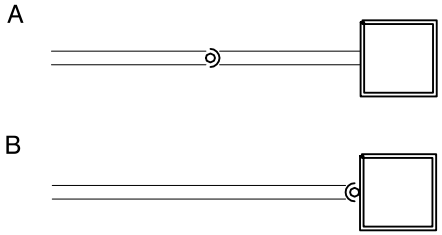

86M4230A

The cup and ball symbol indicates the male and female halves of connector.

A. Plug on lead (Flylead) wired directly to the component.

B. Connector plugs directly into component.

Components

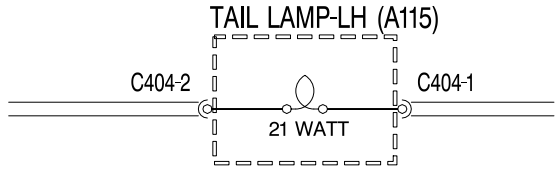

86M4231A

The name or description of the component is shown. A dotted outline indicates that the componentis not shown in its entirety.

Earth points

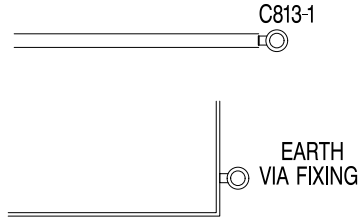

86M4232A

Earth points are identified with an eyelet symbol and a connector number, except where components are grounded through their fixings, when only the eyelet is shown.

Fuses and Diodes

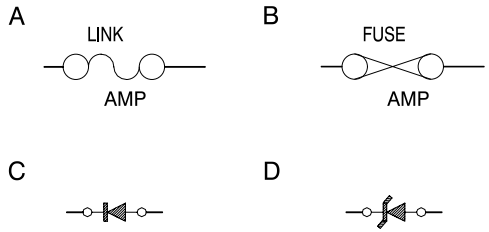

86M4234A

Fusible links (A) and current rated fuses (B) are identified as shown.

The direction of the arrow in a Diode symbol (C) indicates the direction of current flow. The Zener diode (D) - prevents current flow until a precise voltage is reached.

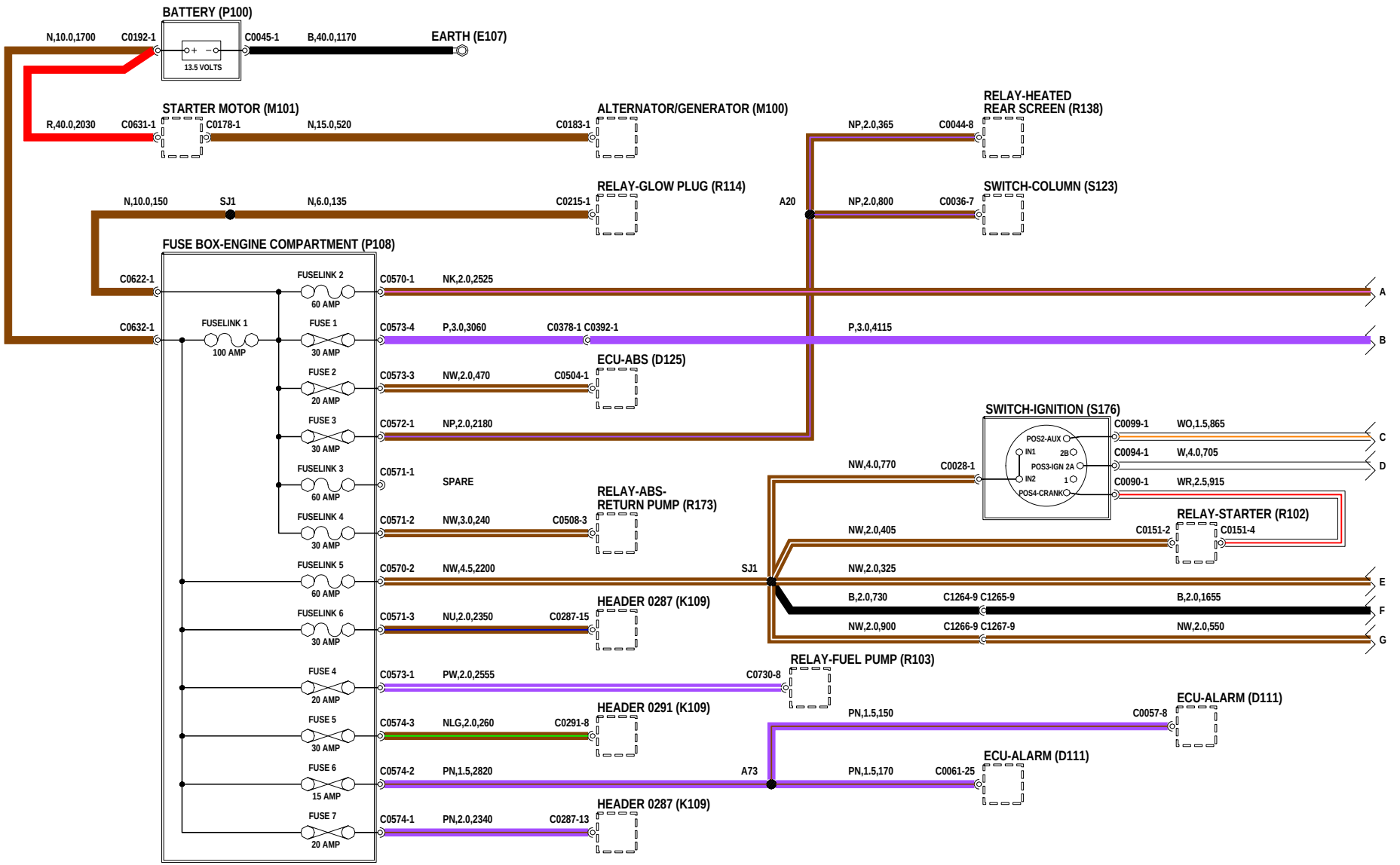
BATTERY (P100)
13.5 VOLTS
N,10.0,1700
C0192-1
C0045-1
B,40.0,1170
EARTH (E107)
STARTER MOTOR (M101)
R,40.0,2030
C0631-1
C0178-1
N,15.0,520
C0183-1
ALTERNATOR/GENERATOR (M100)
RELAY-HEATED REAR SCREEN (R138)
NP,2.0,365
C0044-8
RELAY-GLOW PLUG (R114)
N,10.0,150
SJ1
N,6.0,135
C0215-1
A20
NP,2.0,800
C0036-7
SWITCH-COLUMN (S123)
FUSE BOX-ENGINE COMPARTMENT (P108)
C0622-1
C0632-1
FUSELINK 1
100 AMP
FUSELINK 2
60 AMP
FUSE 1
30 AMP
FUSE 2
20 AMP
FUSE 3
30 AMP
FUSELINK 3
60 AMP
FUSELINK 4
30 AMP
FUSELINK 5
60 AMP
FUSELINK 6
30 AMP
FUSE 4
20 AMP
FUSE 5
30 AMP
FUSE 6
15 AMP
FUSE 7
20 AMP
C0570-1
NK,2.0,2525
A
C0573-4
P,3.0,3060
C0378-1 C0392-1
P,3.0,4115
B
ECU-ABS (D125)
C0573-3
NW,2.0,470
C0504-1
C0572-1
NP,2.0,2180
SWITCH-IGNITION (S176)
POS2-AUX
IN1
2B
POS3-IGN 2A
IN2
1
POS4-CRANK
C0099-1
WO,1.5,865
C
C0094-1
W,4.0,705
D
C0090-1
WR,2.5,915
NW,4.0,770
C0028-1
C0571-1
SPARE
RELAY-ABS-RETURN PUMP (R173)
C0571-2
NW,3.0,240
C0508-3
RELAY-STARTER (R102)
NW,2.0,405
C0151-2
C0151-4
C0570-2
NW,4.5,2200
SJ1
NW,2.0,325
E
B,2.0,730
C1264-9 C1265-9
B,2.0,1655
F
HEADER 0287 (K109)
C0571-3
NU,2.0,2350
C0287-15
NW,2.0,900
C1266-9 C1267-9
NW,2.0,550
G
RELAY-FUEL PUMP (R103)
C0573-1
PW,2.0,2555
C0730-8
ECU-ALARM (D111)
PN,1.5,150
C0057-8
HEADER 0291 (K109)
C0574-3
NLG,2.0,260
C0291-8
ECU-ALARM (D111)
C0574-2
PN,1.5,2820
A73
PN,1.5,170
C0061-25
HEADER 0287 (K109)
C0574-1
PN,2.0,2340
C0287-13

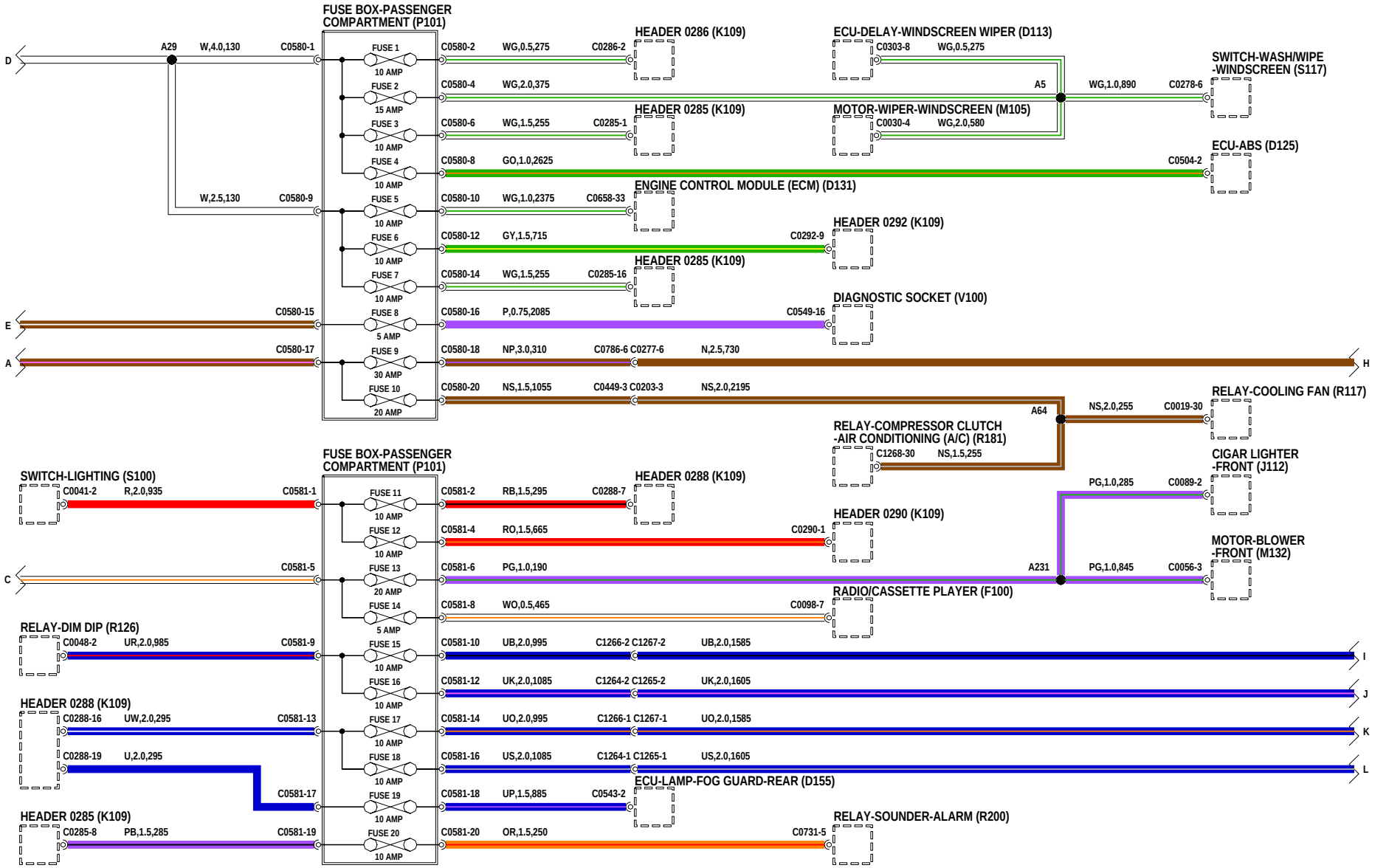
FUSE BOX-PASSENGER COMPARTMENT (P101)
D
A29
W,4.0,130
C0580-1
FUSE 1
10 AMP
FUSE 2
15 AMP
FUSE 3
10 AMP
FUSE 4
10 AMP
W,2.5,130
C0580-9
FUSE 5
10 AMP
FUSE 6
10 AMP
FUSE 7
10 AMP
C0580-15
FUSE 8
5 AMP
E
C0580-17
FUSE 9
30 AMP
A
FUSE 10
20 AMP
C0580-2
WG,0.5,275
C0286-2
HEADER 0286 (K109)
C0580-4
WG,2.0,375
C0580-6
WG,1.5,255
C0285-1
HEADER 0285 (K109)
C0580-8
GO,1.0,2625
C0580-10
WG,1.0,2375
C0658-33
ENGINE CONTROL MODULE (ECM) (D131)
C0580-12
GY,1.5,715
C0292-9
HEADER 0292 (K109)
C0580-14
WG,1.5,255
C0285-16
HEADER 0285 (K109)
C0580-16
P,0.75,2085
C0549-16
DIAGNOSTIC SOCKET (V100)
C0580-18
NP,3.0,310
C0786-6 C0277-6
N,2.5,730
H
C0580-20
NS,1.5,1055
C0449-3 C0203-3
NS,2.0,2195
ECU-DELAY-WINDSCREEN WIPER (D113)
C0303-8
WG,0.5,275
A5
WG,1.0,890
C0278-6
SWITCH-WASH/WIPE -WINDSCREEN (S117)
MOTOR-WIPER-WINDSCREEN (M105)
C0030-4
WG,2.0,580
C0504-2
ECU-ABS (D125)
A64
NS,2.0,255
C0019-30
RELAY-COOLING FAN (R117)
RELAY-COMPRESSOR CLUTCH -AIR CONDITIONING (A/C) (R181)
C1268-30
NS,1.5,255
FUSE BOX-PASSENGER COMPARTMENT (P101)
SWITCH-LIGHTING (S100)
C0041-2
R,2.0,935
C0581-1
FUSE 11
10 AMP
FUSE 12
10 AMP
C
C0581-5
FUSE 13
20 AMP
FUSE 14
5 AMP
RELAY-DIM DIP (R126)
C0048-2
UR,2.0,985
C0581-9
FUSE 15
10 AMP
FUSE 16
10 AMP
HEADER 0288 (K109)
C0288-16
UW,2.0,295
C0581-13
FUSE 17
10 AMP
C0288-19
U,2.0,295
FUSE 18
10 AMP
C0581-17
FUSE 19
10 AMP
HEADER 0285 (K109)
C0285-8
PB,1.5,285
C0581-19
FUSE 20
10 AMP
C0581-2
RB,1.5,295
C0288-7
HEADER 0288 (K109)
C0581-4
RO,1.5,665
C0290-1
HEADER 0290 (K109)
C0581-6
PG,1.0,190
A231
PG,1.0,845
C0056-3
MOTOR-BLOWER -FRONT (M132)
PG,1.0,285
C0089-2
CIGAR LIGHTER -FRONT (J112)
C0581-8
WO,0.5,465
C0098-7
RADIO/CASSETTE PLAYER (F100)
C0581-10
UB,2.0,995
C1266-2 C1267-2
UB,2.0,1585
I
C0581-12
UK,2.0,1085
C1264-2 C1265-2
UK,2.0,1605
J
C0581-14
UO,2.0,995
C1266-1 C1267-1
UO,2.0,1585
K
C0581-16
US,2.0,1085
C1264-1 C1265-1
US,2.0,1605
L
C0581-18
UP,1.5,885
C0543-2
ECU-LAMP-FOG GUARD-REAR (D155)
C0581-20
OR,1.5,250
C0731-5
RELAY-SOUNDER-ALARM (R200)

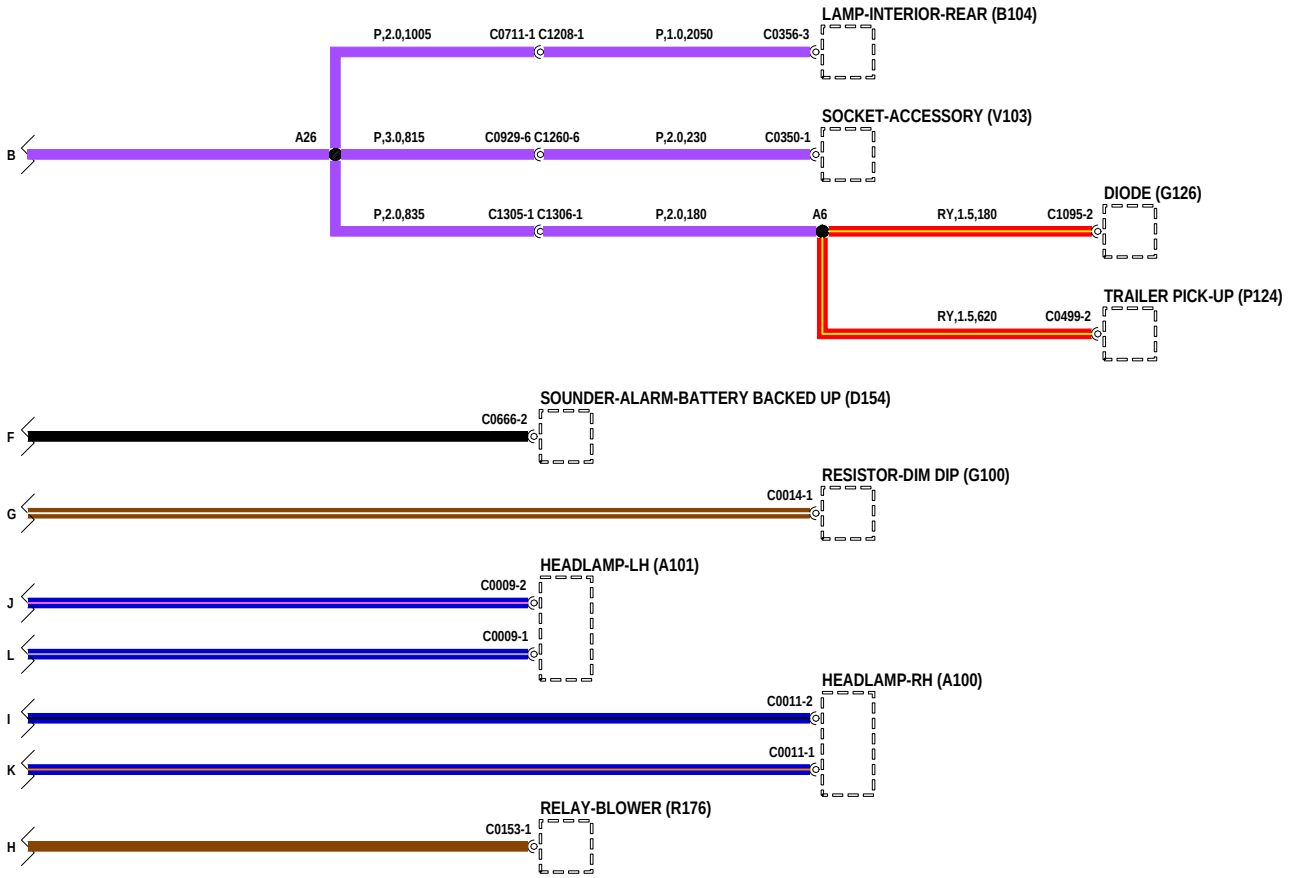
LAMP-INTERIOR-REAR (B104)
P,2.0,1005
C0711-1 C1208-1
P,1.0,2050
C0356-3
SOCKET-ACCESSORY (V103)
B
A26
P,3.0,815
C0929-6 C1260-6
P,2.0,230
C0350-1
DIODE (G126)
P,2.0,835
C1305-1 C1306-1
P,2.0,180
A6
RY,1.5,180
C1095-2
TRAILER PICK-UP (P124)
RY,1.5,620
C0499-2
SOUNDER-ALARM-BATTERY BACKED UP (D154)
F
C0666-2
RESISTOR-DIM DIP (G100)
G
C0014-1
HEADLAMP-LH (A101)
J
C0009-2
L
C0009-1
HEADLAMP-RH (A100)
I
C0011-2
K
C0011-1
RELAY-BLOWER (R176)
H
C0153-1

EARTH DISTRIBUTION

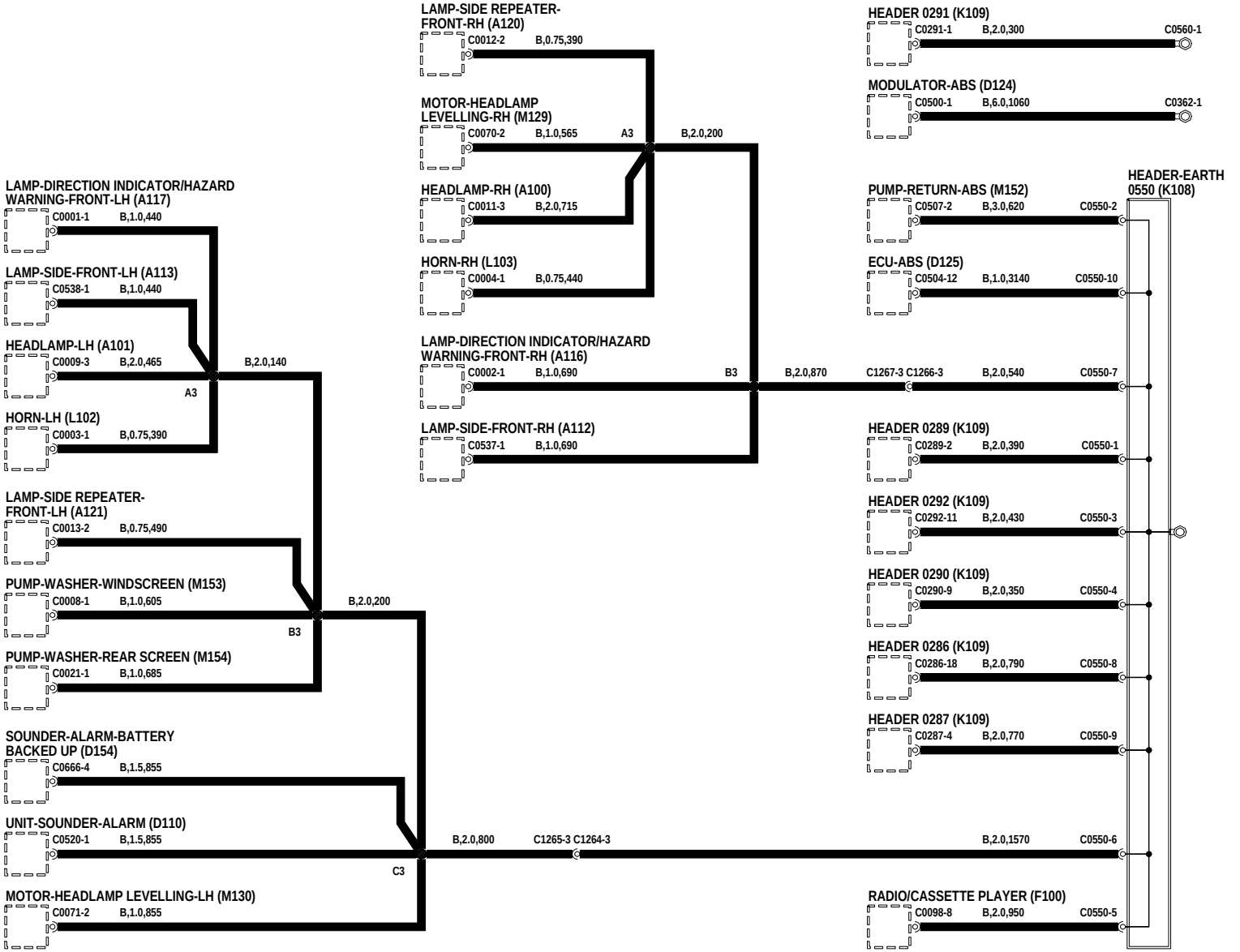

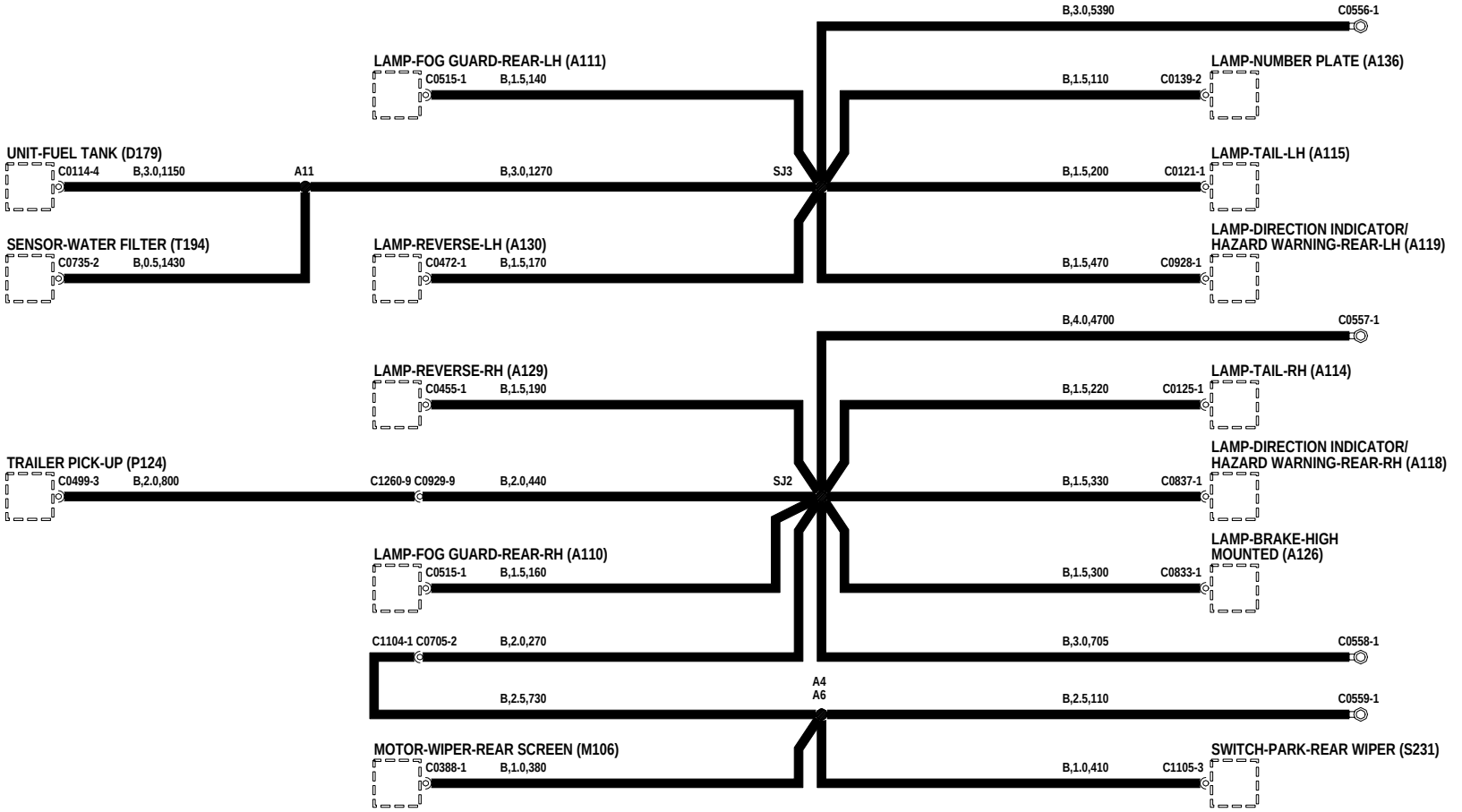
B,3.0,5390
C0556-1
LAMP-FOG GUARD-REAR-LH (A111)
C0515-1
B,1.5,140
B,1.5,110
C0139-2
LAMP-NUMBER PLATE (A136)
UNIT-FUEL TANK (D179)
C0114-4
B,3.0,1150
A11
B,3.0,1270
SJ3
B,1.5,200
C0121-1
LAMP-TAIL-LH (A115)
SENSOR-WATER FILTER (T194)
C0735-2
B,0.5,1430
LAMP-REVERSE-LH (A130)
C0472-1
B,1.5,170
B,1.5,470
C0928-1
LAMP-DIRECTION INDICATOR/
HAZARD WARNING-REAR-LH (A119)
B,4.0,4700
C0557-1
LAMP-REVERSE-RH (A129)
C0455-1
B,1.5,190
B,1.5,220
C0125-1
LAMP-TAIL-RH (A114)
TRAILER PICK-UP (P124)
C0499-3
B,2.0,800
C1260-9 C0929-9
B,2.0,440
SJ2
B,1.5,330
C0837-1
LAMP-DIRECTION INDICATOR/
HAZARD WARNING-REAR-RH (A118)
LAMP-FOG GUARD-REAR-RH (A110)
C0515-1
B,1.5,160
B,1.5,300
C0833-1
LAMP-BRAKE-HIGH
MOUNTED (A126)
C1104-1 C0705-2
B,2.0,270
B,3.0,705
C0558-1
A4
A6
B,2.5,730
B,2.5,110
C0559-1
MOTOR-WIPER-REAR SCREEN (M106)
C0388-1
B,1.0,380
B,1.0,410
C1105-3
SWITCH-PARK-REAR WIPER (S231)

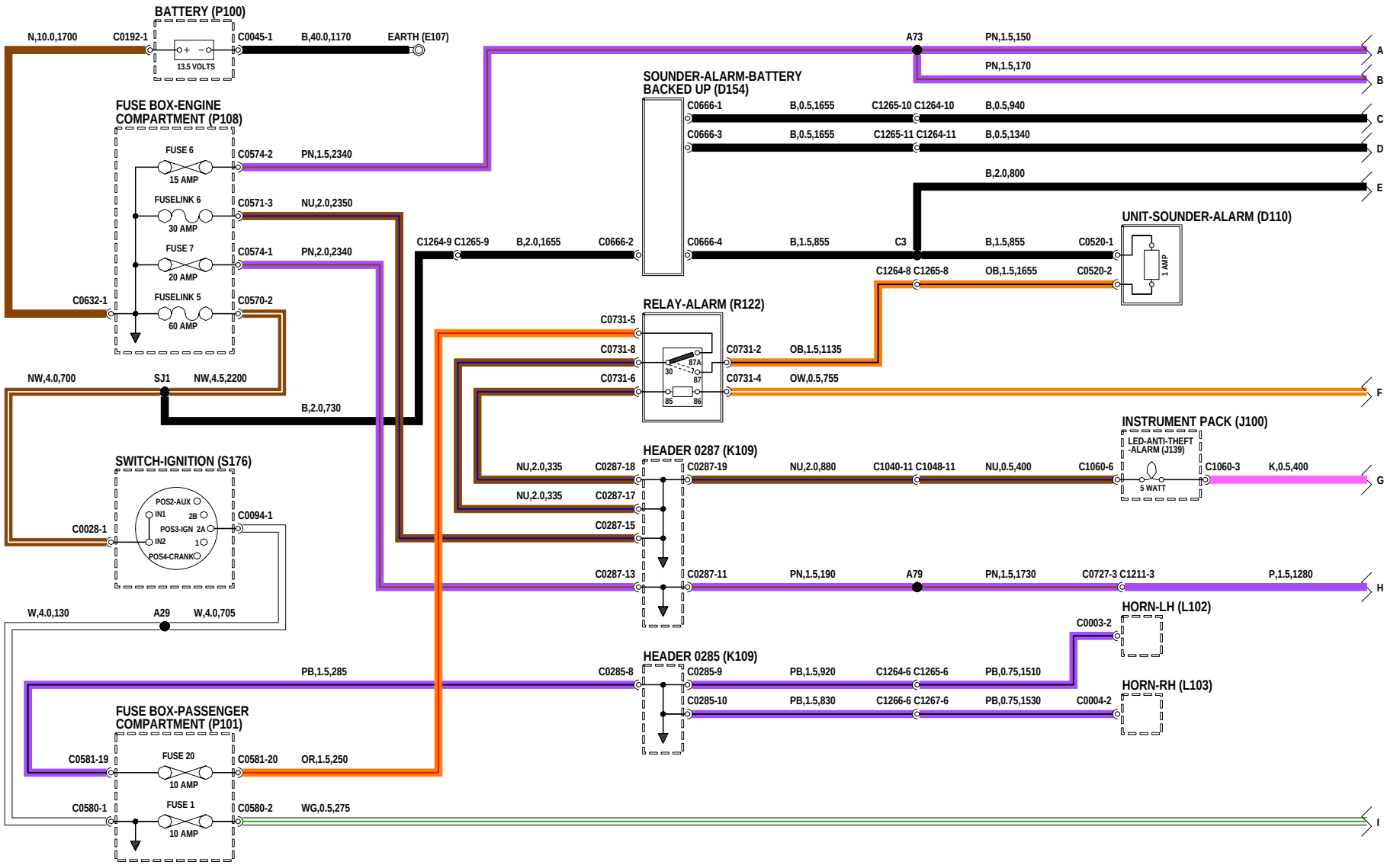
BATTERY (P100)
N,10.0,1700
C0192-1
13.5 VOLTS
C0045-1
B,40.0,1170
EARTH (E107)
FUSE BOX-ENGINE COMPARTMENT (P108)
FUSE 6
15 AMP
C0574-2
PN,1.5,2340
FUSELINK 6
30 AMP
C0571-3
NU,2.0,2350
FUSE 7
20 AMP
C0574-1
PN,2.0,2340
FUSELINK 5
60 AMP
C0570-2
C0632-1
NW,4.0,700
SJ1
NW,4.5,2200
B,2.0,730
SWITCH-IGNITION (S176)
POS2-AUX
IN1
2B
POS3-IGN
2A
IN2
1
POS4-CRANK
C0028-1
C0094-1
W,4.0,130
A29
W,4.0,705
FUSE BOX-PASSENGER COMPARTMENT (P101)
C0581-19
FUSE 20
10 AMP
C0581-20
OR,1.5,250
C0580-1
FUSE 1
10 AMP
C0580-2
WG,0.5,275
PB,1.5,285
A73
PN,1.5,150
PN,1.5,170
A
B
SOUNDER-ALARM-BATTERY BACKED UP (D154)
C0666-1
B,0.5,1655
C1265-10 C1264-10
B,0.5,940
C
C0666-3
B,0.5,1655
C1265-11 C1264-11
B,0.5,1340
D
B,2.0,800
E
C1264-9 C1265-9
B,2.0,1655
C0666-2
C0666-4
B,1.5,855
C3
B,1.5,855
C0520-1
C1264-8 C1265-8
OB,1.5,1655
C0520-2
UNIT-SOUNDER-ALARM (D110)
1 AMP
RELAY-ALARM (R122)
C0731-5
C0731-8
C0731-6
87A
30
87
85
86
C0731-2
OB,1.5,1135
C0731-4
OW,0.5,755
F
INSTRUMENT PACK (J100)
LED-ANTI-THEFT -ALARM (J139)
5 WATT
C1060-6
C1060-3
K,0.5,400
G
HEADER 0287 (K109)
NU,2.0,335
C0287-18
C0287-19
NU,2.0,880
C1040-11 C1048-11
NU,0.5,400
NU,2.0,335
C0287-17
C0287-15
C0287-13
C0287-11
PN,1.5,190
A79
PN,1.5,1730
C0727-3 C1211-3
P,1.5,1280
H
HORN-LH (L102)
C0003-2
HEADER 0285 (K109)
C0285-8
C0285-9
PB,1.5,920
C1264-6 C1265-6
PB,0.75,1510
C0285-10
PB,1.5,830
C1266-6 C1267-6
PB,0.75,1530
C0004-2
HORN-RH (L103)
I

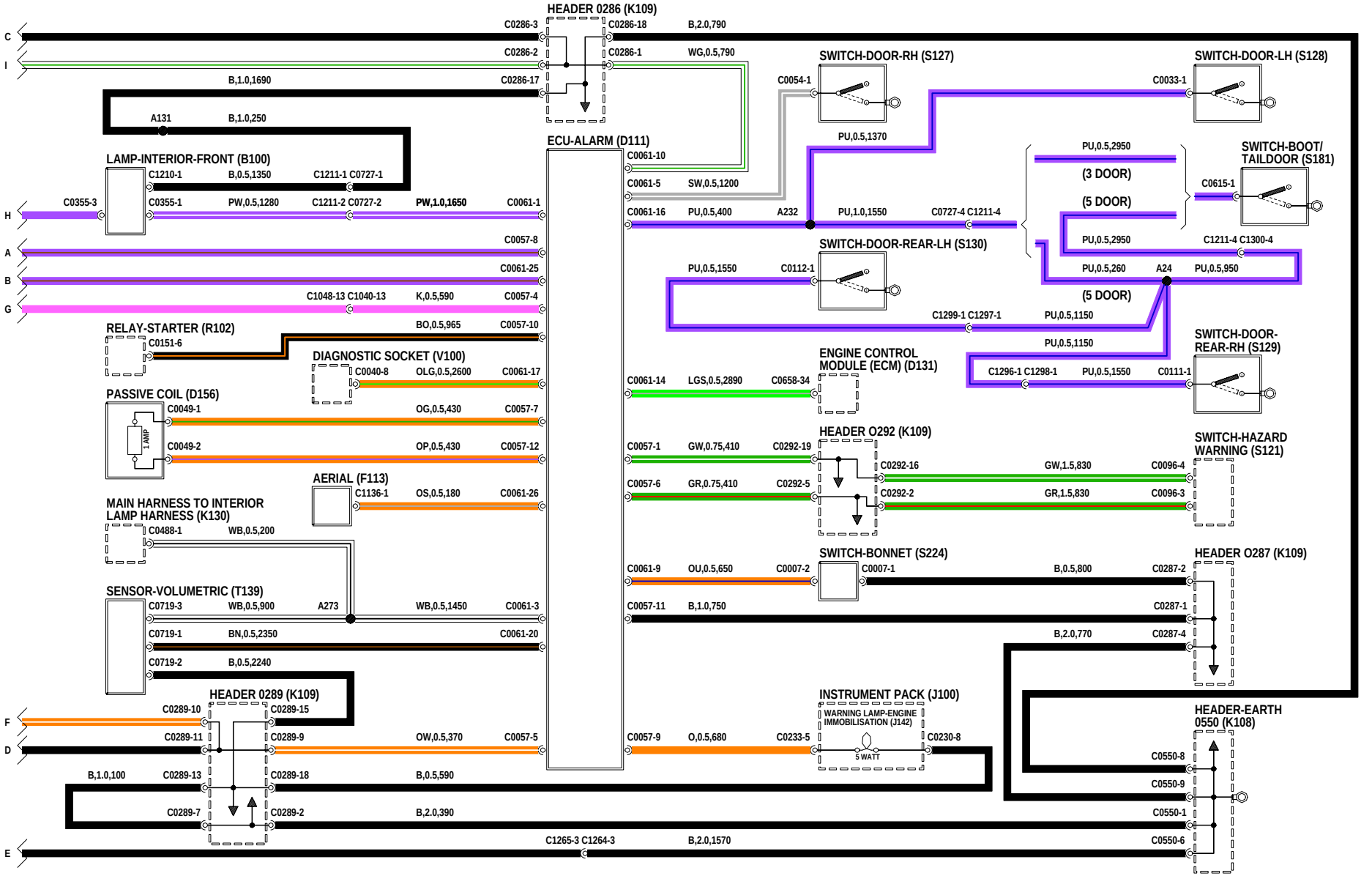
HEADER 0286 (K109)
C0286-3
C0286-18
B,2.0,790
C0286-2
C0286-1
WG,0.5,790
B,1.0,1690
C0286-17
A131
B,1.0,250
SWITCH-DOOR-RH (S127)
C0054-1
SWITCH-DOOR-LH (S128)
C0033-1
PU,0.5,1370
ECU-ALARM (D111)
C0061-10
LAMP-INTERIOR-FRONT (B100)
C1210-1
B,0.5,1350
C1211-1 C0727-1
C0061-5
SW,0.5,1200
C0355-3
C0355-1
PW,0.5,1280
C1211-2 C0727-2
PW,1.0,1650
C0061-1
C0061-16
PU,0.5,400
A232
PU,1.0,1550
C0727-4 C1211-4
PU,0.5,2950
(3 DOOR)
(5 DOOR)
SWITCH-BOOT/
TAILDOOR (S181)
C0615-1
PU,0.5,2950
C1211-4 C1300-4
SWITCH-DOOR-REAR-LH (S130)
PU,0.5,1550
C0112-1
PU,0.5,260
A24
PU,0.5,950
(5 DOOR)
C1299-1 C1297-1
PU,0.5,1150
C0057-8
C0061-25
C1048-13 C1040-13
K,0.5,590
C0057-4
RELAY-STARTER (R102)
BO,0.5,965
C0057-10
C0151-6
DIAGNOSTIC SOCKET (V100)
C0040-8
OLG,0.5,2600
C0061-17
ENGINE CONTROL
MODULE (ECM) (D131)
C0061-14
LGS,0.5,2890
C0658-34
PU,0.5,1150
SWITCH-DOOR-
REAR-RH (S129)
C1296-1 C1298-1
PU,0.5,1550
C0111-1
PASSIVE COIL (D156)
C0049-1
OG,0.5,430
C0057-7
1 AMP
C0049-2
OP,0.5,430
C0057-12
HEADER O292 (K109)
C0057-1
GW,0.75,410
C0292-19
C0292-16
GW,1.5,830
C0096-4
SWITCH-HAZARD
WARNING (S121)
AERIAL (F113)
C1136-1
OS,0.5,180
C0061-26
C0057-6
GR,0.75,410
C0292-5
C0292-2
GR,1.5,830
C0096-3
MAIN HARNESS TO INTERIOR
LAMP HARNESS (K130)
C0488-1
WB,0.5,200
SWITCH-BONNET (S224)
C0061-9
OU,0.5,650
C0007-2
C0007-1
B,0.5,800
C0287-2
HEADER O287 (K109)
SENSOR-VOLUMETRIC (T139)
C0719-3
WB,0.5,900
A273
WB,0.5,1450
C0061-3
C0057-11
B,1.0,750
C0287-1
C0719-1
BN,0.5,2350
C0061-20
B,2.0,770
C0287-4
C0719-2
B,0.5,2240
HEADER 0289 (K109)
C0289-10
C0289-15
INSTRUMENT PACK (J100)
WARNING LAMP-ENGINE
IMMOBILISATION (J142)
5 WATT
HEADER-EARTH
0550 (K108)
C0289-11
C0289-9
OW,0.5,370
C0057-5
C0057-9
O,0.5,680
C0233-5
C0230-8
C0550-8
B,1.0,100
C0289-13
C0289-18
B,0.5,590
C0550-9
C0289-7
C0289-2
B,2.0,390
C0550-1
C1265-3 C1264-3
B,2.0,1570
C0550-6
C
I
H
A
B
G
F
D
E

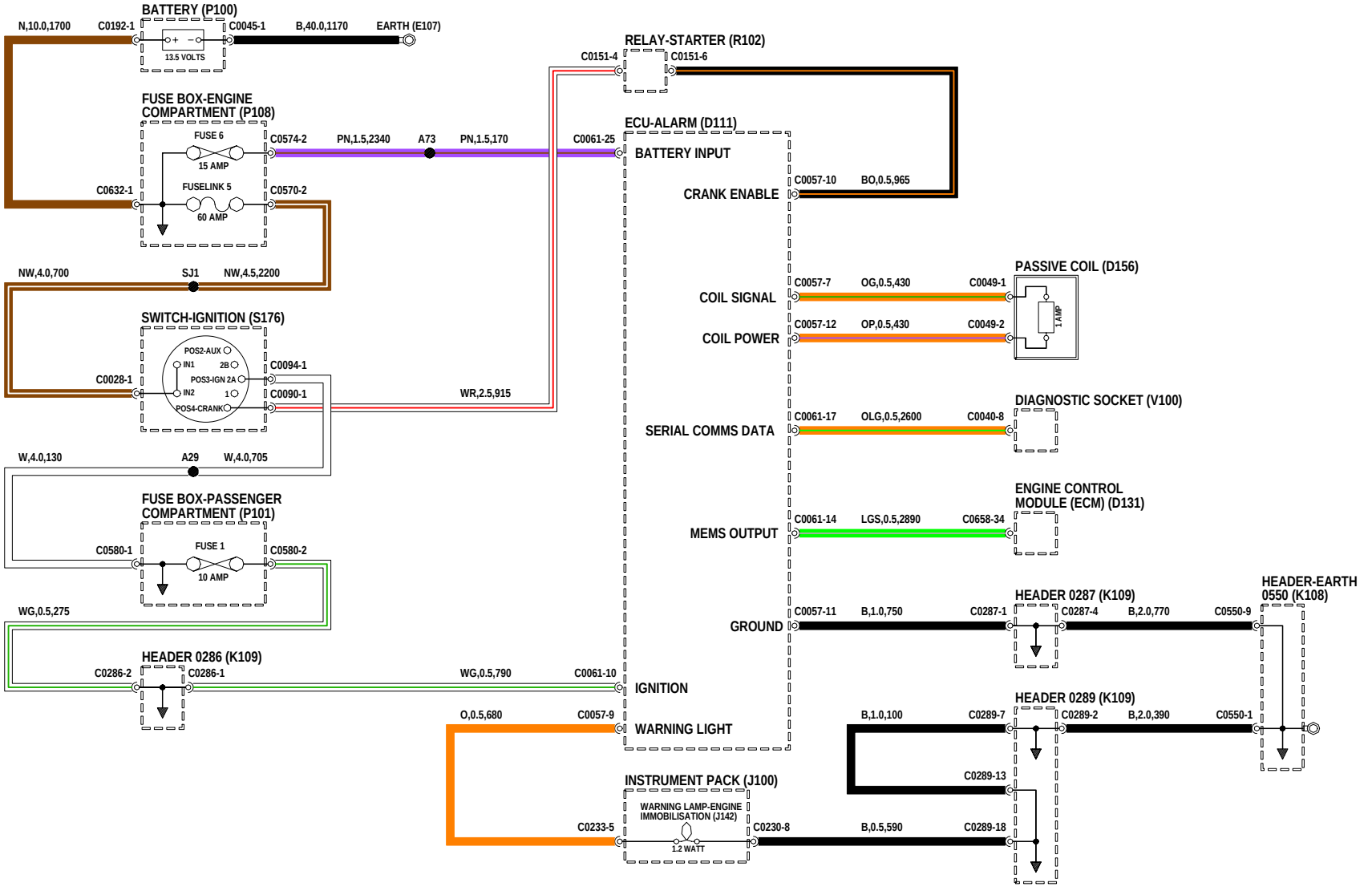
BATTERY (P100)
N,10.0,1700
C0192-1
13.5 VOLTS
C0045-1
B,40.0,1170
EARTH (E107)
RELAY-STARTER (R102)
C0151-4
C0151-6
FUSE BOX-ENGINE COMPARTMENT (P108)
FUSE 6
15 AMP
C0574-2
PN,1.5,2340
A73
PN,1.5,170
C0061-25
ECU-ALARM (D111)
BATTERY INPUT
C0632-1
FUSELINK 5
60 AMP
C0570-2
CRANK ENABLE
C0057-10
BO,0.5,965
NW,4.0,700
SJ1
NW,4.5,2200
PASSIVE COIL (D156)
COIL SIGNAL
C0057-7
OG,0.5,430
C0049-1
1 AMP
COIL POWER
C0057-12
OP,0.5,430
C0049-2
SWITCH-IGNITION (S176)
POS2-AUX
IN1
2B
POS3-IGN 2A
IN2
1
POS4-CRANK
C0028-1
C0094-1
C0090-1
WR,2.5,915
DIAGNOSTIC SOCKET (V100)
SERIAL COMMS DATA
C0061-17
OLG,0.5,2600
C0040-8
W,4.0,130
A29
W,4.0,705
ENGINE CONTROL MODULE (ECM) (D131)
MEMS OUTPUT
C0061-14
LGS,0.5,2890
C0658-34
FUSE BOX-PASSENGER COMPARTMENT (P101)
FUSE 1
10 AMP
C0580-1
C0580-2
HEADER-EARTH 0550 (K108)
HEADER 0287 (K109)
GROUND
C0057-11
B,1.0,750
C0287-1
C0287-4
B,2.0,770
C0550-9
WG,0.5,275
HEADER 0286 (K109)
C0286-2
C0286-1
WG,0.5,790
C0061-10
IGNITION
HEADER 0289 (K109)
O,0.5,680
C0057-9
WARNING LIGHT
B,1.0,100
C0289-7
C0289-2
B,2.0,390
C0550-1
C0289-13
INSTRUMENT PACK (J100)
WARNING LAMP-ENGINE IMMOBILISATION (J142)
C0233-5
1.2 WATT
C0230-8
B,0.5,590
C0289-18

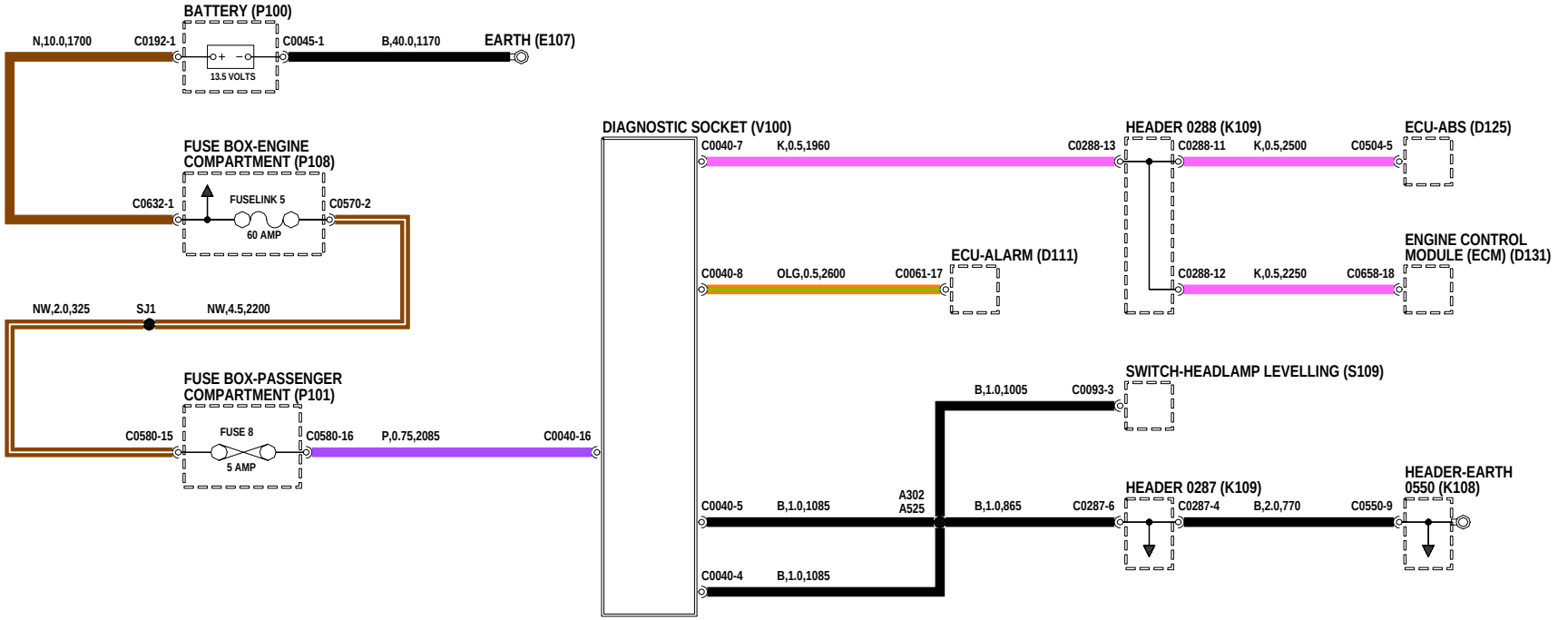
BATTERY (P100)
N,10.0,1700
C0192-1
13.5 VOLTS
C0045-1
B,40.0,1170
EARTH (E107)
FUSE BOX-ENGINE COMPARTMENT (P108)
C0632-1
FUSELINK 5
60 AMP
C0570-2
NW,2.0,325
SJ1
NW,4.5,2200
FUSE BOX-PASSENGER COMPARTMENT (P101)
C0580-15
FUSE 8
5 AMP
C0580-16
P,0.75,2085
C0040-16
DIAGNOSTIC SOCKET (V100)
C0040-7
K,0.5,1960
C0288-13
HEADER 0288 (K109)
C0288-11
K,0.5,2500
C0504-5
ECU-ABS (D125)
C0040-8
OLG,0.5,2600
C0061-17
ECU-ALARM (D111)
C0288-12
K,0.5,2250
C0658-18
ENGINE CONTROL MODULE (ECM) (D131)
B,1.0,1005
C0093-3
SWITCH-HEADLAMP LEVELLING (S109)
C0040-5
B,1.0,1085
A302
A525
B,1.0,865
C0287-6
HEADER 0287 (K109)
C0287-4
B,2.0,770
C0550-9
HEADER-EARTH 0550 (K108)
C0040-4
B,1.0,1085

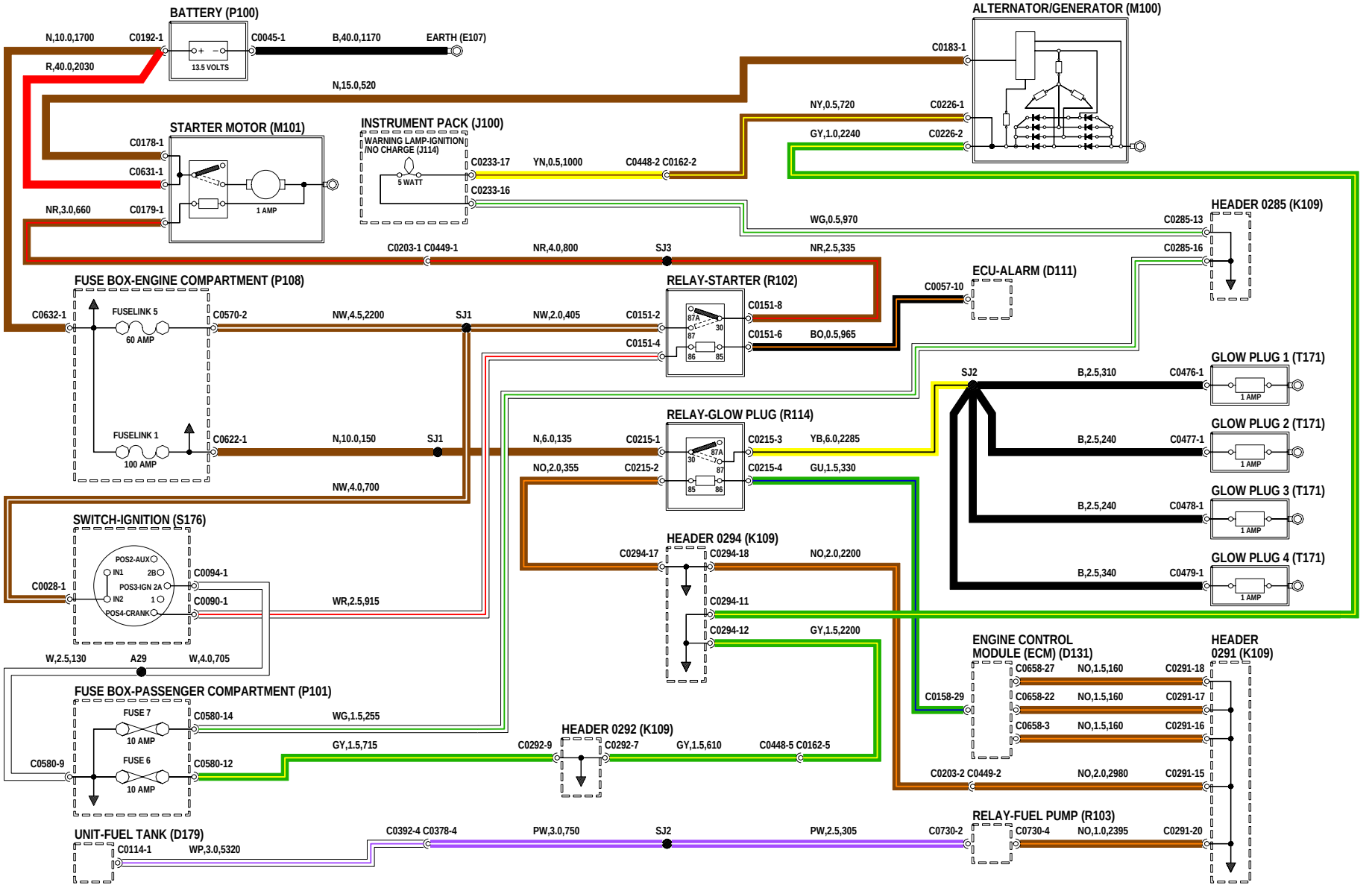
BATTERY (P100)
13.5 VOLTS
N,10.0,1700
C0192-1
C0045-1
B,40.0,1170
EARTH (E107)
R,40.0,2030
N,15.0,520
ALTERNATOR/GENERATOR (M100)
C0183-1
NY,0.5,720
C0226-1
GY,1.0,2240
C0226-2
STARTER MOTOR (M101)
C0178-1
C0631-1
NR,3.0,660
C0179-1
1 AMP
INSTRUMENT PACK (J100)
WARNING LAMP-IGNITION /NO CHARGE (J114)
5 WATT
C0233-17
YN,0.5,1000
C0448-2 C0162-2
C0233-16
WG,0.5,970
HEADER 0285 (K109)
C0285-13
C0285-16
C0203-1 C0449-1
NR,4.0,800
SJ3
NR,2.5,335
FUSE BOX-ENGINE COMPARTMENT (P108)
C0632-1
FUSELINK 5
60 AMP
C0570-2
NW,4.5,2200
SJ1
NW,2.0,405
C0151-2
C0151-4
RELAY-STARTER (R102)
87A
30
87
86
85
C0151-8
C0151-6
BO,0.5,965
C0057-10
ECU-ALARM (D111)
FUSELINK 1
100 AMP
C0622-1
N,10.0,150
SJ1
NW,4.0,700
SJ2
B,2.5,310
C0476-1
GLOW PLUG 1 (T171)
RELAY-GLOW PLUG (R114)
N,6.0,135
C0215-1
C0215-3
YB,6.0,2285
NO,2.0,355
C0215-2
C0215-4
GU,1.5,330
B,2.5,240
C0477-1
GLOW PLUG 2 (T171)
B,2.5,240
C0478-1
GLOW PLUG 3 (T171)
B,2.5,340
C0479-1
GLOW PLUG 4 (T171)
SWITCH-IGNITION (S176)
POS2-AUX
IN1
2B
POS3-IGN 2A
IN2
1
POS4-CRANK
C0028-1
C0094-1
C0090-1
WR,2.5,915
HEADER 0294 (K109)
C0294-17
C0294-18
NO,2.0,2200
C0294-11
C0294-12
GY,1.5,2200
W,2.5,130
A29
W,4.0,705
ENGINE CONTROL MODULE (ECM) (D131)
C0658-27
NO,1.5,160
C0291-18
C0158-29
C0658-22
NO,1.5,160
C0291-17
C0658-3
NO,1.5,160
C0291-16
HEADER 0291 (K109)
FUSE BOX-PASSENGER COMPARTMENT (P101)
FUSE 7
10 AMP
C0580-14
WG,1.5,255
FUSE 6
10 AMP
C0580-9
C0580-12
GY,1.5,715
HEADER 0292 (K109)
C0292-9
C0292-7
GY,1.5,610
C0448-5 C0162-5
C0203-2 C0449-2
NO,2.0,2980
C0291-15
RELAY-FUEL PUMP (R103)
C0730-4
NO,1.0,2395
C0291-20
UNIT-FUEL TANK (D179)
C0114-1
WP,3.0,5320
C0392-4 C0378-4
PW,3.0,750
SJ2
PW,2.5,305
C0730-2

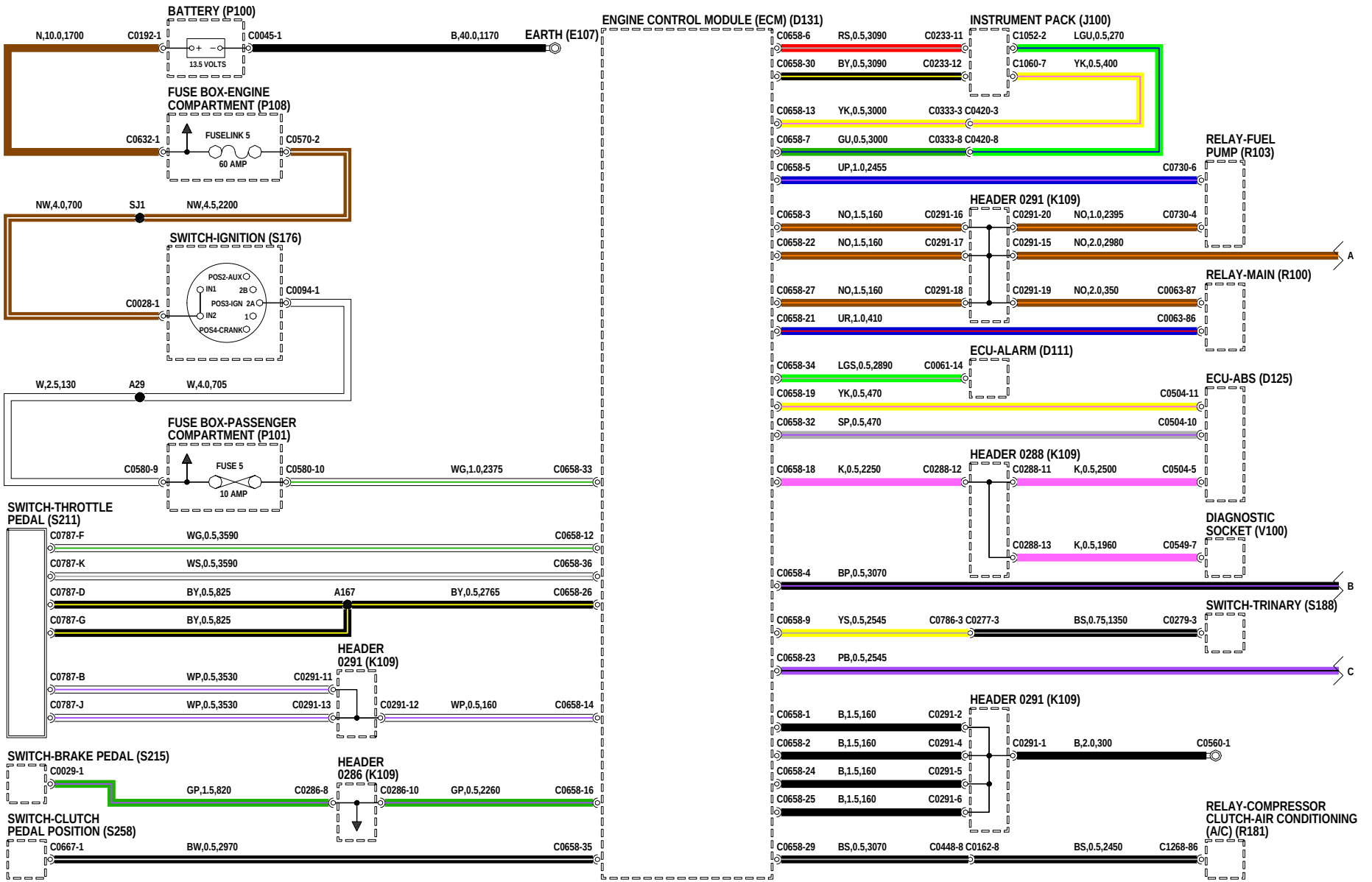
BATTERY (P100)
N,10.0,1700
C0192-1
C0045-1
B,40.0,1170
EARTH (E107)
13.5 VOLTS
FUSE BOX-ENGINE COMPARTMENT (P108)
C0632-1
FUSELINK 5
C0570-2
60 AMP
NW,4.0,700
SJ1
NW,4.5,2200
SWITCH-IGNITION (S176)
POS2-AUX
IN1
2B
POS3-IGN
2A
IN2
1
POS4-CRANK
C0028-1
C0094-1
W,2.5,130
A29
W,4.0,705
FUSE BOX-PASSENGER COMPARTMENT (P101)
C0580-9
FUSE 5
10 AMP
C0580-10
WG,1.0,2375
C0658-33
SWITCH-THROTTLE PEDAL (S211)
C0787-F
WG,0.5,3590
C0658-12
C0787-K
WS,0.5,3590
C0658-36
C0787-D
BY,0.5,825
A167
BY,0.5,2765
C0658-26
C0787-G
BY,0.5,825
HEADER 0291 (K109)
C0787-B
WP,0.5,3530
C0291-11
C0787-J
WP,0.5,3530
C0291-13
C0291-12
WP,0.5,160
C0658-14
SWITCH-BRAKE PEDAL (S215)
C0029-1
GP,1.5,820
C0286-8
HEADER 0286 (K109)
C0286-10
GP,0.5,2260
C0658-16
SWITCH-CLUTCH PEDAL POSITION (S258)
C0667-1
BW,0.5,2970
C0658-35
ENGINE CONTROL MODULE (ECM) (D131)
INSTRUMENT PACK (J100)
C0658-6
RS,0.5,3090
C0233-11
C1052-2
LGU,0.5,270
C0658-30
BY,0.5,3090
C0233-12
C1060-7
YK,0.5,400
C0658-13
YK,0.5,3000
C0333-3
C0420-3
C0658-7
GU,0.5,3000
C0333-8
C0420-8
RELAY-FUEL PUMP (R103)
C0658-5
UP,1.0,2455
C0730-6
HEADER 0291 (K109)
C0658-3
NO,1.5,160
C0291-16
C0291-20
NO,1.0,2395
C0730-4
C0658-22
NO,1.5,160
C0291-17
C0291-15
NO,2.0,2980
A
RELAY-MAIN (R100)
C0658-27
NO,1.5,160
C0291-18
C0291-19
NO,2.0,350
C0063-87
C0658-21
UR,1.0,410
C0063-86
ECU-ALARM (D111)
C0658-34
LGS,0.5,2890
C0061-14
ECU-ABS (D125)
C0658-19
YK,0.5,470
C0504-11
C0658-32
SP,0.5,470
C0504-10
HEADER 0288 (K109)
C0658-18
K,0.5,2250
C0288-12
C0288-11
K,0.5,2500
C0504-5
DIAGNOSTIC SOCKET (V100)
C0288-13
K,0.5,1960
C0549-7
C0658-4
BP,0.5,3070
B
SWITCH-TRINARY (S188)
C0658-9
YS,0.5,2545
C0786-3
C0277-3
BS,0.75,1350
C0279-3
C0658-23
PB,0.5,2545
C
HEADER 0291 (K109)
C0658-1
B,1.5,160
C0291-2
C0658-2
B,1.5,160
C0291-4
C0291-1
B,2.0,300
C0560-1
C0658-24
B,1.5,160
C0291-5
C0658-25
B,1.5,160
C0291-6
RELAY-COMPRESSOR CLUTCH-AIR CONDITIONING (A/C) (R181)
C0658-29
BS,0.5,3070
C0448-8
C0162-8
BS,0.5,2450
C1268-86

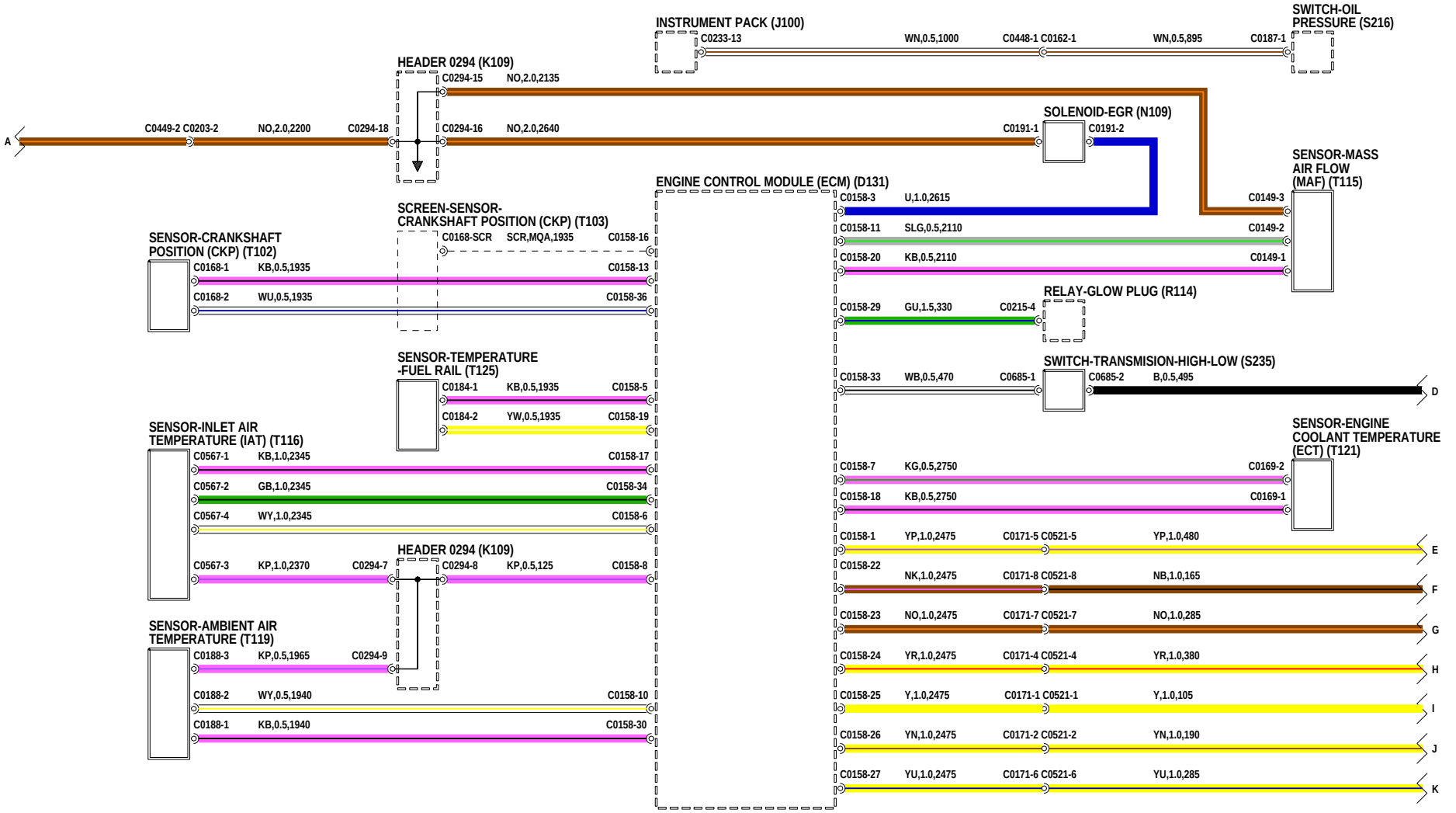
INSTRUMENT PACK (J100)
C0233-13
WN,0.5,1000
C0448-1 C0162-1
WN,0.5,895
C0187-1
SWITCH-OIL PRESSURE (S216)
HEADER 0294 (K109)
C0294-15
NO,2.0,2135
A
C0449-2 C0203-2
NO,2.0,2200
C0294-18
C0294-16
NO,2.0,2640
C0191-1
SOLENOID-EGR (N109)
C0191-2
SENSOR-MASS AIR FLOW (MAF) (T115)
ENGINE CONTROL MODULE (ECM) (D131)
C0158-3
U,1.0,2615
C0149-3
SCREEN-SENSOR-CRANKSHAFT POSITION (CKP) (T103)
C0168-SCR
SCR,MQA,1935
C0158-16
SENSOR-CRANKSHAFT POSITION (CKP) (T102)
C0168-1
KB,0.5,1935
C0158-13
C0168-2
WU,0.5,1935
C0158-36
C0158-11
SLG,0.5,2110
C0149-2
C0158-20
KB,0.5,2110
C0149-1
RELAY-GLOW PLUG (R114)
C0158-29
GU,1.5,330
C0215-4
SENSOR-TEMPERATURE -FUEL RAIL (T125)
C0184-1
KB,0.5,1935
C0158-5
C0184-2
YW,0.5,1935
C0158-19
SWITCH-TRANSMISION-HIGH-LOW (S235)
C0158-33
WB,0.5,470
C0685-1
C0685-2
B,0.5,495
D
SENSOR-INLET AIR TEMPERATURE (IAT) (T116)
C0567-1
KB,1.0,2345
C0158-17
C0567-2
GB,1.0,2345
C0158-34
C0567-4
WY,1.0,2345
C0158-6
SENSOR-ENGINE COOLANT TEMPERATURE (ECT) (T121)
C0158-7
KG,0.5,2750
C0169-2
C0158-18
KB,0.5,2750
C0169-1
HEADER 0294 (K109)
C0567-3
KP,1.0,2370
C0294-7
C0294-8
KP,0.5,125
C0158-8
C0158-1
YP,1.0,2475
C0171-5 C0521-5
YP,1.0,480
E
C0158-22
NK,1.0,2475
C0171-8 C0521-8
NB,1.0,165
F
C0158-23
NO,1.0,2475
C0171-7 C0521-7
NO,1.0,285
G
SENSOR-AMBIENT AIR TEMPERATURE (T119)
C0188-3
KP,0.5,1965
C0294-9
C0158-24
YR,1.0,2475
C0171-4 C0521-4
YR,1.0,380
H
C0188-2
WY,0.5,1940
C0158-10
C0158-25
Y,1.0,2475
C0171-1 C0521-1
Y,1.0,105
I
C0188-1
KB,0.5,1940
C0158-30
C0158-26
YN,1.0,2475
C0171-2 C0521-2
YN,1.0,190
J
C0158-27
YU,1.0,2475
C0171-6 C0521-6
YU,1.0,285
K

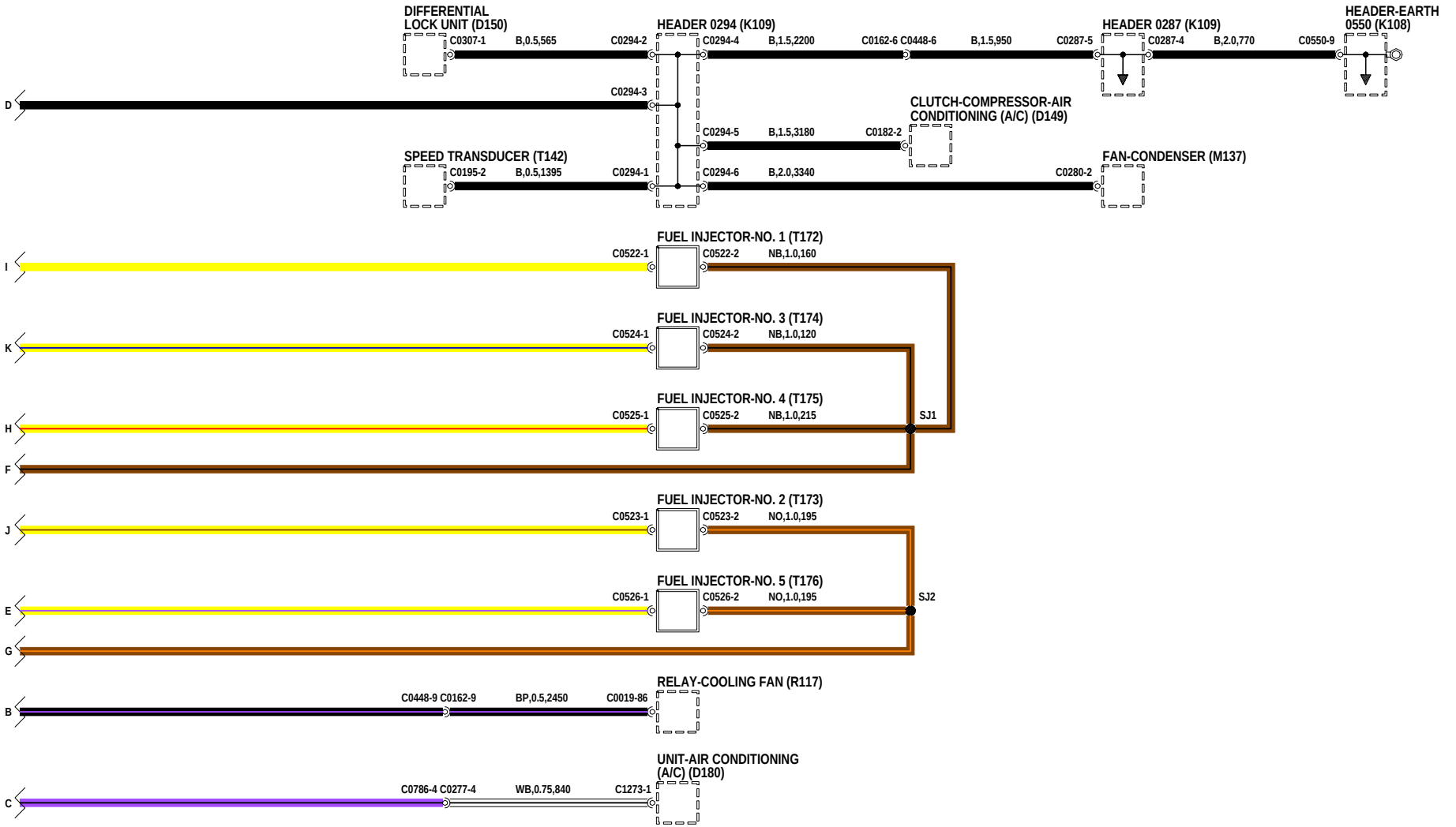
DIFFERENTIAL LOCK UNIT (D150)
C0307-1
B,0.5,565
C0294-2
HEADER 0294 (K109)
C0294-4
B,1.5,2200
C0162-6 C0448-6
B,1.5,950
C0287-5
HEADER 0287 (K109)
C0287-4
B,2.0,770
C0550-9
HEADER-EARTH 0550 (K108)
D
C0294-3
CLUTCH-COMPRESSOR-AIR CONDITIONING (A/C) (D149)
C0294-5
B,1.5,3180
C0182-2
SPEED TRANSDUCER (T142)
C0195-2
B,0.5,1395
C0294-1
C0294-6
B,2.0,3340
C0280-2
FAN-CONDENSER (M137)
FUEL INJECTOR-NO. 1 (T172)
I
C0522-1
C0522-2
NB,1.0,160
FUEL INJECTOR-NO. 3 (T174)
K
C0524-1
C0524-2
NB,1.0,120
FUEL INJECTOR-NO. 4 (T175)
H
C0525-1
C0525-2
NB,1.0,215
SJ1
F
FUEL INJECTOR-NO. 2 (T173)
J
C0523-1
C0523-2
NO,1.0,195
FUEL INJECTOR-NO. 5 (T176)
E
C0526-1
C0526-2
NO,1.0,195
SJ2
G
RELAY-COOLING FAN (R117)
B
C0448-9 C0162-9
BP,0.5,2450
C0019-86
UNIT-AIR CONDITIONING (A/C) (D180)
C
C0786-4 C0277-4
WB,0.75,840
C1273-1

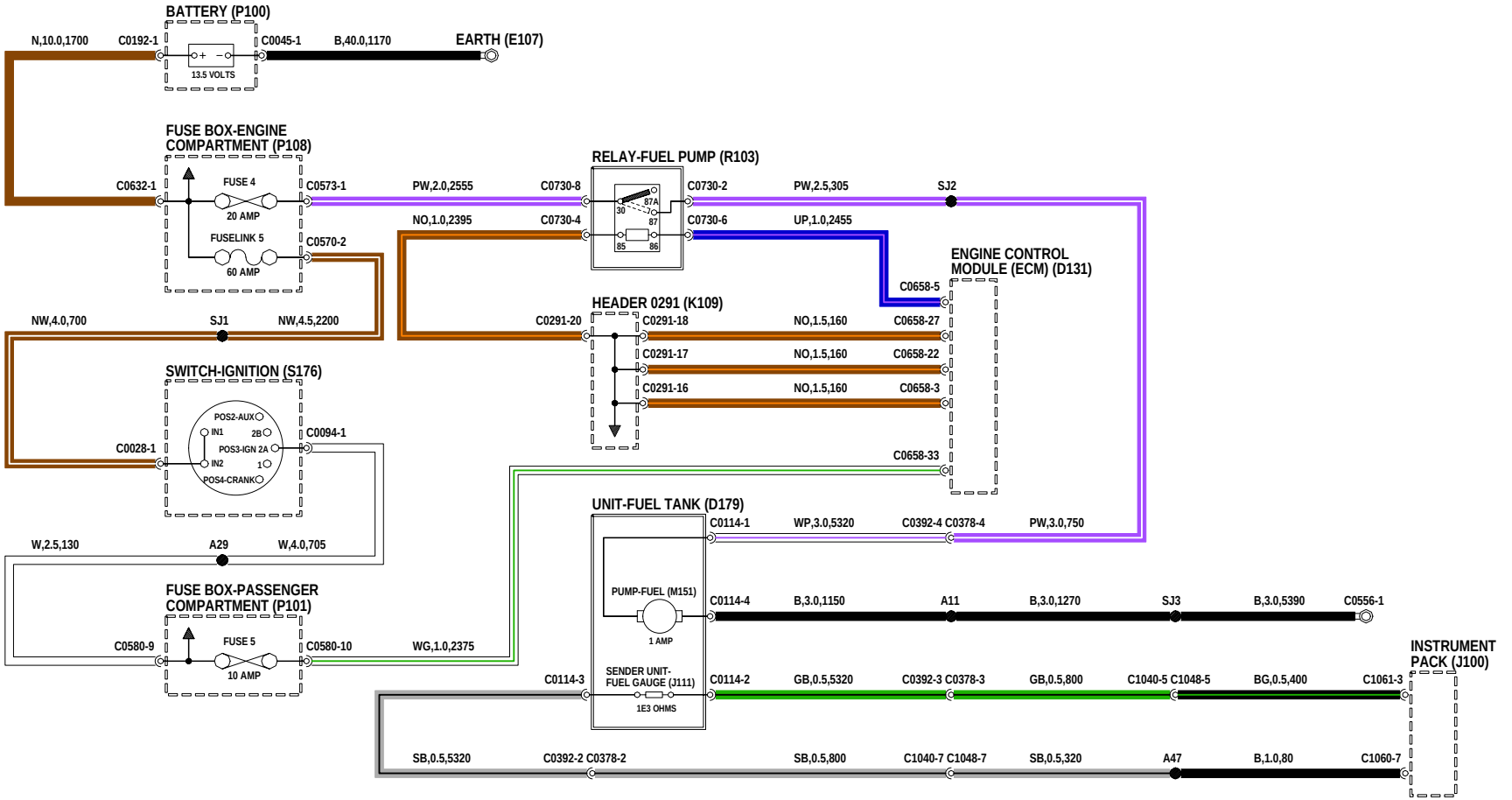
BATTERY (P100)
N,10.0,1700
C0192-1
13.5 VOLTS
C0045-1
B,40.0,1170
EARTH (E107)
FUSE BOX-ENGINE COMPARTMENT (P108)
C0632-1
FUSE 4
20 AMP
FUSELINK 5
60 AMP
C0573-1
C0570-2
PW,2.0,2555
C0730-8
NO,1.0,2395
C0730-4
RELAY-FUEL PUMP (R103)
30
87A
87
85
86
C0730-2
PW,2.5,305
SJ2
C0730-6
UP,1.0,2455
ENGINE CONTROL MODULE (ECM) (D131)
C0658-5
HEADER 0291 (K109)
C0291-20
C0291-18
NO,1.5,160
C0658-27
C0291-17
NO,1.5,160
C0658-22
C0291-16
NO,1.5,160
C0658-3
C0658-33
NW,4.0,700
SJ1
NW,4.5,2200
SWITCH-IGNITION (S176)
POS2-AUX
IN1
2B
POS3-IGN 2A
IN2
1
POS4-CRANK
C0028-1
C0094-1
W,2.5,130
A29
W,4.0,705
UNIT-FUEL TANK (D179)
C0114-1
WP,3.0,5320
C0392-4 C0378-4
PW,3.0,750
PUMP-FUEL (M151)
1 AMP
C0114-4
B,3.0,1150
A11
B,3.0,1270
SJ3
B,3.0,5390
C0556-1
FUSE BOX-PASSENGER COMPARTMENT (P101)
C0580-9
FUSE 5
10 AMP
C0580-10
WG,1.0,2375
C0114-3
SENDER UNIT-FUEL GAUGE (J111)
1E3 OHMS
C0114-2
GB,0.5,5320
C0392-3 C0378-3
GB,0.5,800
C1040-5 C1048-5
BG,0.5,400
C1061-3
INSTRUMENT PACK (J100)
SB,0.5,5320
C0392-2 C0378-2
SB,0.5,800
C1040-7 C1048-7
SB,0.5,320
A47
B,1.0,80
C1060-7

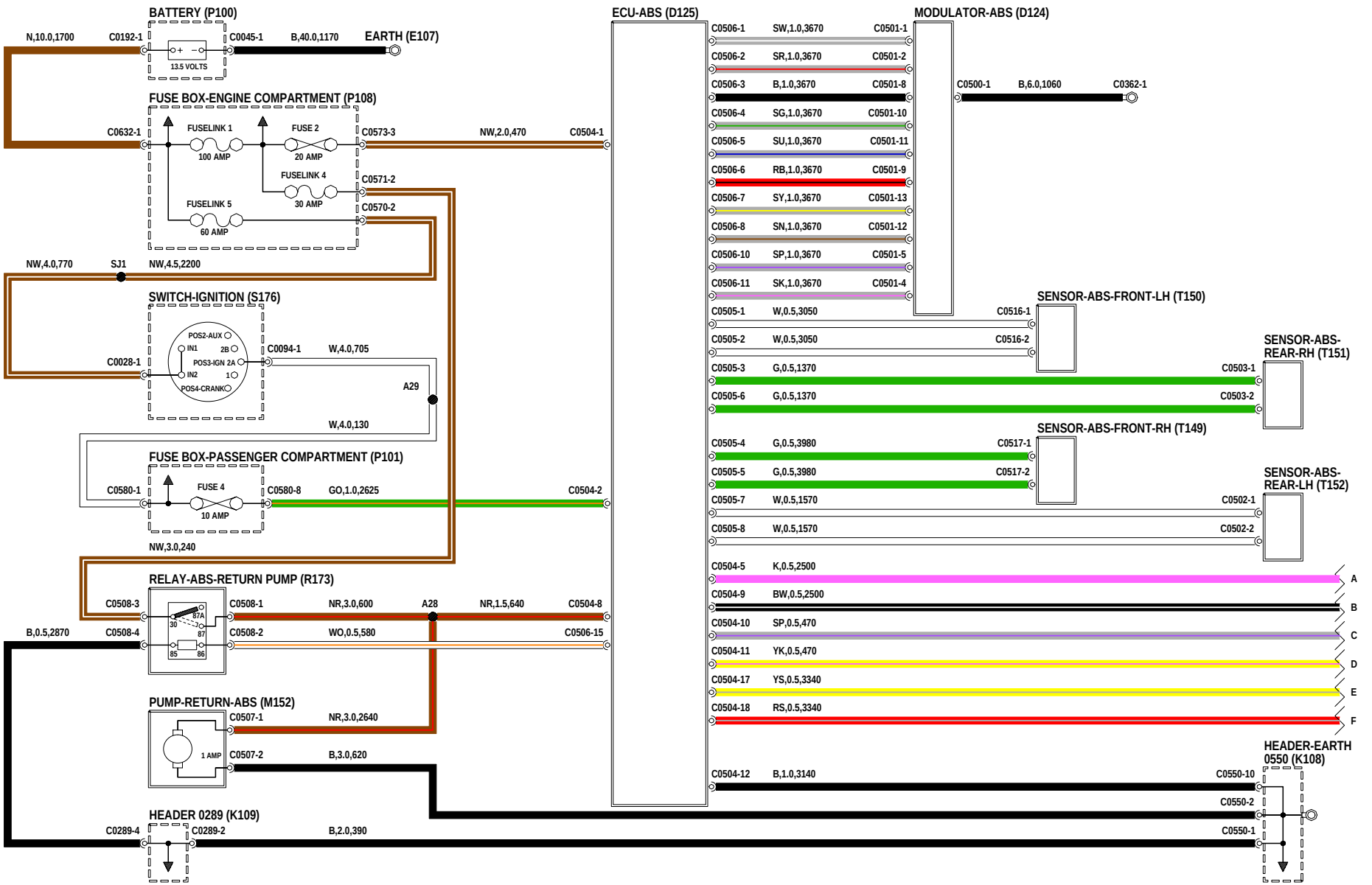
BATTERY (P100)
N,10.0,1700
C0192-1
13.5 VOLTS
C0045-1
B,40.0,1170
EARTH (E107)
FUSE BOX-ENGINE COMPARTMENT (P108)
C0632-1
FUSELINK 1
100 AMP
FUSE 2
20 AMP
C0573-3
NW,2.0,470
C0504-1
FUSELINK 4
30 AMP
C0571-2
FUSELINK 5
60 AMP
C0570-2
NW,4.0,770
SJ1
NW,4.5,2200
SWITCH-IGNITION (S176)
POS2-AUX
IN1
2B
POS3-IGN 2A
IN2
1
POS4-CRANK
C0028-1
C0094-1
W,4.0,705
A29
W,4.0,130
FUSE BOX-PASSENGER COMPARTMENT (P101)
C0580-1
FUSE 4
10 AMP
C0580-8
GO,1.0,2625
C0504-2
NW,3.0,240
RELAY-ABS-RETURN PUMP (R173)
C0508-3
87A
30
87
85
86
C0508-1
NR,3.0,600
A28
NR,1.5,640
C0504-8
B,0.5,2870
C0508-4
C0508-2
WO,0.5,580
C0506-15
PUMP-RETURN-ABS (M152)
C0507-1
NR,3.0,2640
1 AMP
C0507-2
B,3.0,620
HEADER 0289 (K109)
C0289-4
C0289-2
B,2.0,390
ECU-ABS (D125)
MODULATOR-ABS (D124)
C0506-1 SW,1.0,3670 C0501-1
C0506-2 SR,1.0,3670 C0501-2
C0506-3 B,1.0,3670 C0501-8
C0506-4 SG,1.0,3670 C0501-10
C0506-5 SU,1.0,3670 C0501-11
C0506-6 RB,1.0,3670 C0501-9
C0506-7 SY,1.0,3670 C0501-13
C0506-8 SN,1.0,3670 C0501-12
C0506-10 SP,1.0,3670 C0501-5
C0506-11 SK,1.0,3670 C0501-4
C0500-1 B,6.0,1060 C0362-1
SENSOR-ABS-FRONT-LH (T150)
C0505-1 W,0.5,3050 C0516-1
C0505-2 W,0.5,3050 C0516-2
SENSOR-ABS-REAR-RH (T151)
C0505-3 G,0.5,1370 C0503-1
C0505-6 G,0.5,1370 C0503-2
SENSOR-ABS-FRONT-RH (T149)
C0505-4 G,0.5,3980 C0517-1
C0505-5 G,0.5,3980 C0517-2
SENSOR-ABS-REAR-LH (T152)
C0505-7 W,0.5,1570 C0502-1
C0505-8 W,0.5,1570 C0502-2
C0504-5 K,0.5,2500 A
C0504-9 BW,0.5,2500 B
C0504-10 SP,0.5,470 C
C0504-11 YK,0.5,470 D
C0504-17 YS,0.5,3340 E
C0504-18 RS,0.5,3340 F
HEADER-EARTH 0550 (K108)
C0504-12 B,1.0,3140 C0550-10
C0550-2
C0550-1

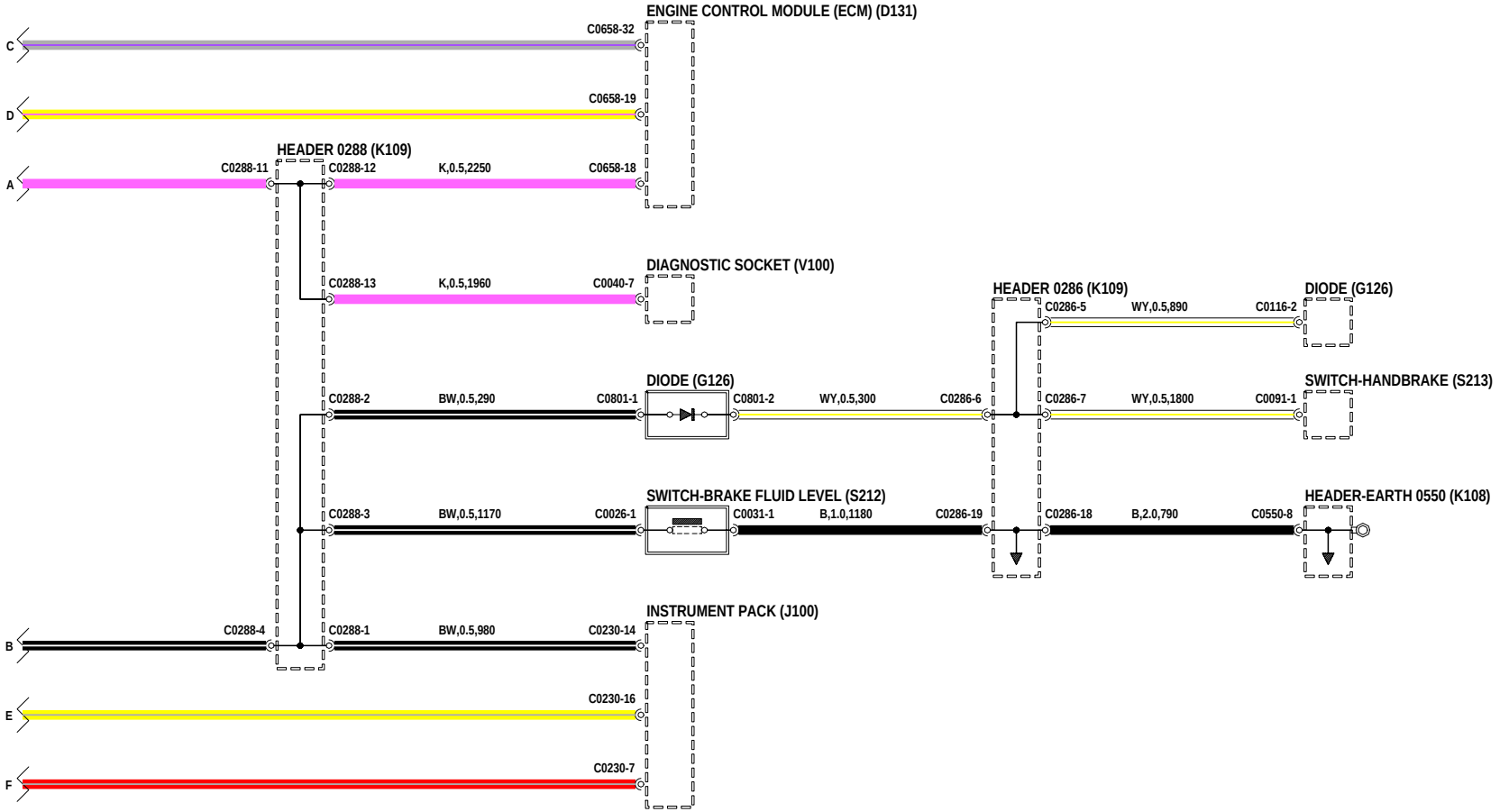
ENGINE CONTROL MODULE (ECM) (D131)
C
C0658-32
D
C0658-19
HEADER 0288 (K109)
A
C0288-11
C0288-12
K,0.5,2250
C0658-18
DIAGNOSTIC SOCKET (V100)
C0288-13
K,0.5,1960
C0040-7
HEADER 0286 (K109)
C0286-5
WY,0.5,890
C0116-2
DIODE (G126)
DIODE (G126)
C0288-2
BW,0.5,290
C0801-1
C0801-2
WY,0.5,300
C0286-6
C0286-7
WY,0.5,1800
C0091-1
SWITCH-HANDBRAKE (S213)
SWITCH-BRAKE FLUID LEVEL (S212)
C0288-3
BW,0.5,1170
C0026-1
C0031-1
B,1.0,1180
C0286-19
C0286-18
B,2.0,790
C0550-8
HEADER-EARTH 0550 (K108)
INSTRUMENT PACK (J100)
B
C0288-4
C0288-1
BW,0.5,980
C0230-14
E
C0230-16
F
C0230-7

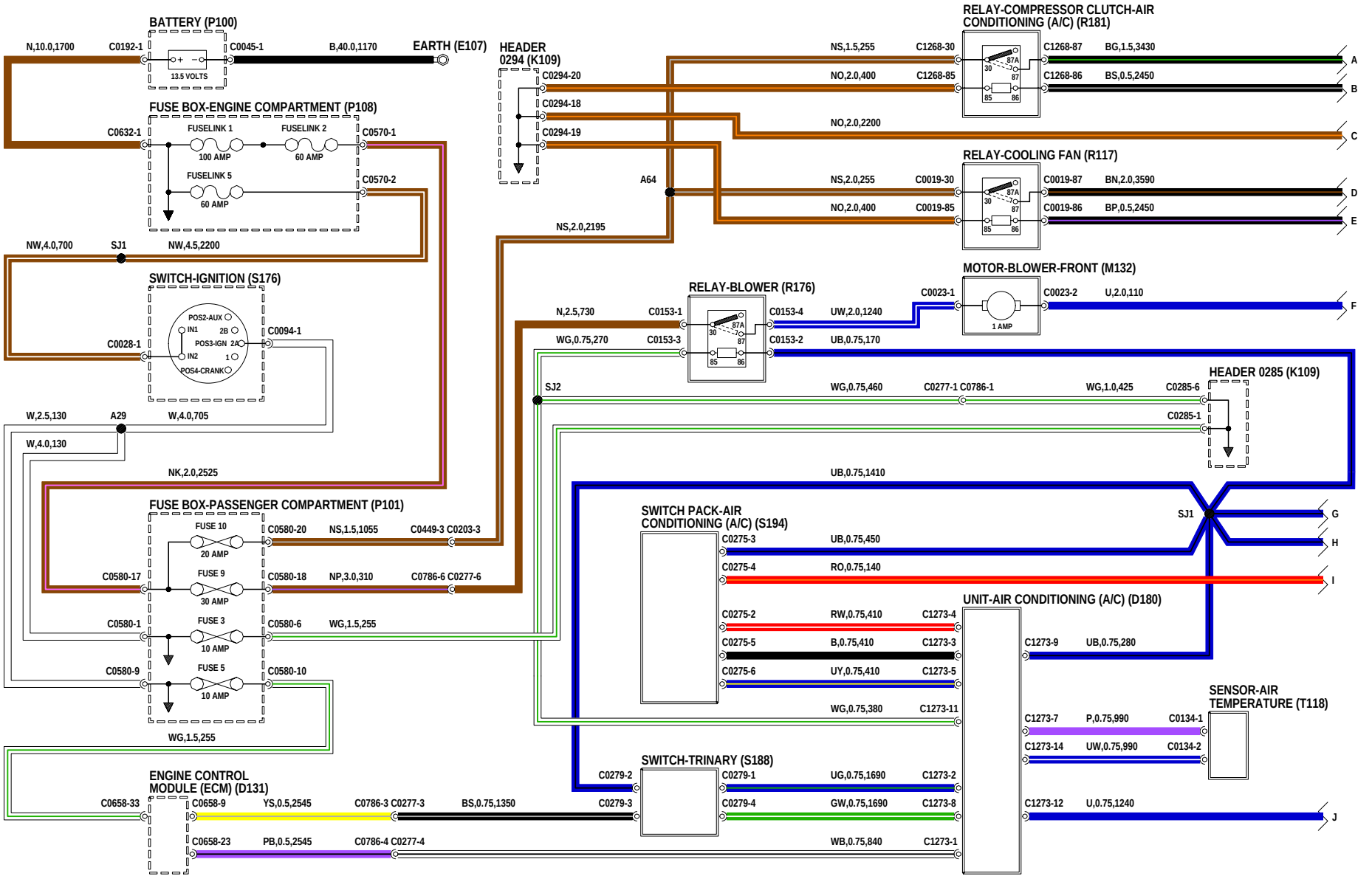
BATTERY (P100)
N,10.0,1700
C0192-1
13.5 VOLTS
C0045-1
B,40.0,1170
EARTH (E107)
HEADER 0294 (K109)
C0294-20
C0294-18
C0294-19
FUSE BOX-ENGINE COMPARTMENT (P108)
C0632-1
FUSELINK 1
100 AMP
FUSELINK 2
60 AMP
C0570-1
FUSELINK 5
60 AMP
C0570-2
A64
NS,2.0,2195
NW,4.0,700
SJ1
NW,4.5,2200
SWITCH-IGNITION (S176)
POS2-AUX
IN1
2B
POS3-IGN
2A
IN2
1
POS4-CRANK
C0028-1
C0094-1
W,2.5,130
A29
W,4.0,705
W,4.0,130
NK,2.0,2525
FUSE BOX-PASSENGER COMPARTMENT (P101)
FUSE 10
20 AMP
C0580-20
NS,1.5,1055
C0449-3 C0203-3
FUSE 9
30 AMP
C0580-17
C0580-18
NP,3.0,310
C0786-6 C0277-6
FUSE 3
10 AMP
C0580-1
C0580-6
WG,1.5,255
FUSE 5
10 AMP
C0580-9
C0580-10
WG,1.5,255
ENGINE CONTROL MODULE (ECM) (D131)
C0658-33
C0658-9
YS,0.5,2545
C0786-3 C0277-3
BS,0.75,1350
C0279-3
C0658-23
PB,0.5,2545
C0786-4 C0277-4
RELAY-COMPRESSOR CLUTCH-AIR CONDITIONING (A/C) (R181)
NS,1.5,255
C1268-30
C1268-87
BG,1.5,3430
A
NO,2.0,400
C1268-85
C1268-86
BS,0.5,2450
B
NO,2.0,2200
C
RELAY-COOLING FAN (R117)
NS,2.0,255
C0019-30
C0019-87
BN,2.0,3590
D
NO,2.0,400
C0019-85
C0019-86
BP,0.5,2450
E
MOTOR-BLOWER-FRONT (M132)
C0023-1
C0023-2
U,2.0,110
F
1 AMP
RELAY-BLOWER (R176)
N,2.5,730
C0153-1
C0153-4
UW,2.0,1240
WG,0.75,270
C0153-3
C0153-2
UB,0.75,170
HEADER 0285 (K109)
SJ2
WG,0.75,460
C0277-1 C0786-1
WG,1.0,425
C0285-6
C0285-1
UB,0.75,1410
SWITCH PACK-AIR CONDITIONING (A/C) (S194)
SJ1
G
H
C0275-3
UB,0.75,450
C0275-4
RO,0.75,140
I
UNIT-AIR CONDITIONING (A/C) (D180)
C0275-2
RW,0.75,410
C1273-4
C0275-5
B,0.75,410
C1273-3
C1273-9
UB,0.75,280
C0275-6
UY,0.75,410
C1273-5
WG,0.75,380
C1273-11
SENSOR-AIR TEMPERATURE (T118)
C1273-7
P,0.75,990
C0134-1
C1273-14
UW,0.75,990
C0134-2
SWITCH-TRINARY (S188)
C0279-2
C0279-1
UG,0.75,1690
C1273-2
C0279-4
GW,0.75,1690
C1273-8
C1273-12
U,0.75,1240
J
WB,0.75,840
C1273-1

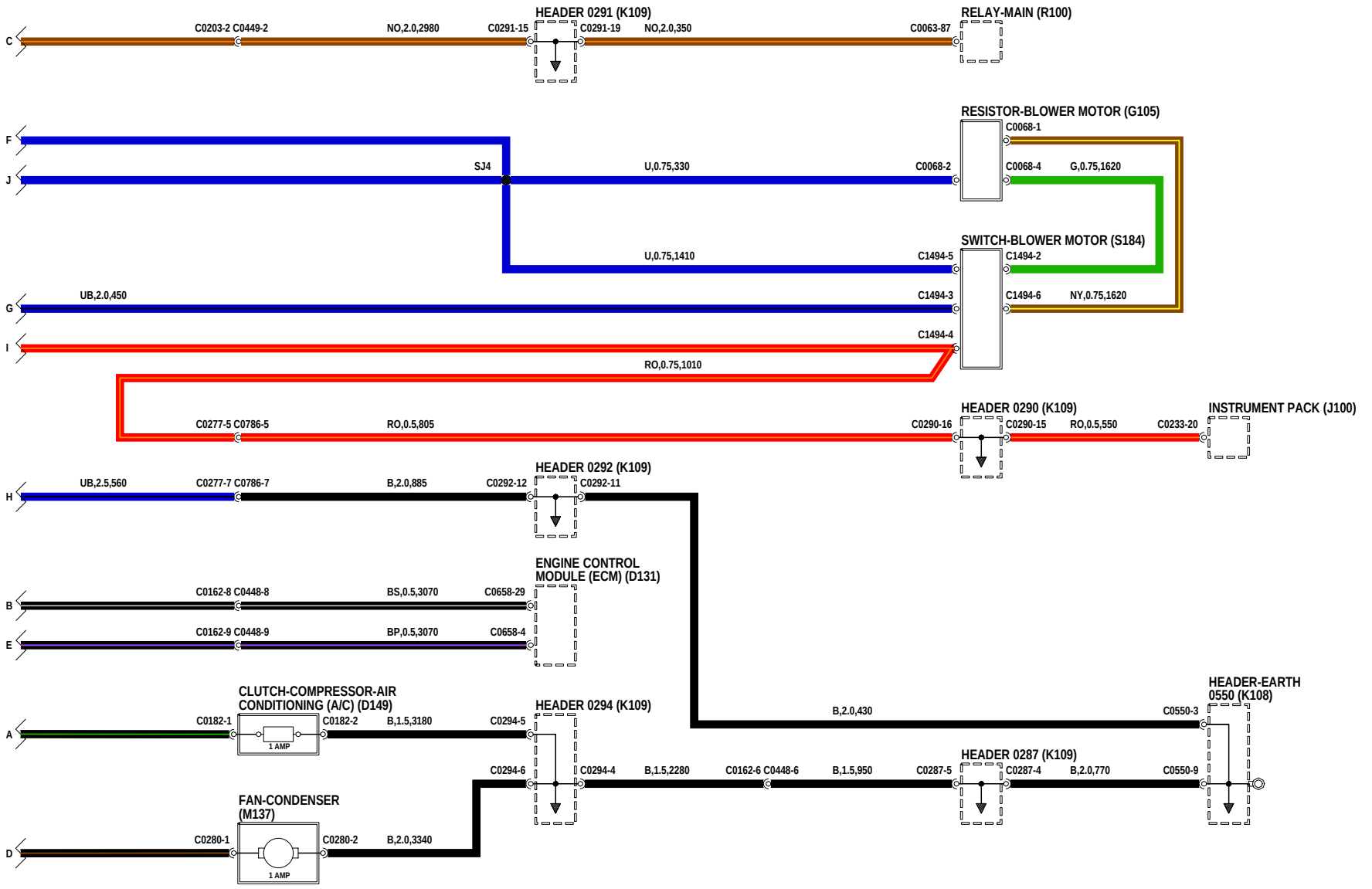
HEADER 0291 (K109)
RELAY-MAIN (R100)
C
C0203-2 C0449-2
NO,2.0,2980
C0291-15
C0291-19
NO,2.0,350
C0063-87
RESISTOR-BLOWER MOTOR (G105)
F
J
SJ4
U,0.75,330
C0068-2
C0068-1
C0068-4
G,0.75,1620
SWITCH-BLOWER MOTOR (S184)
U,0.75,1410
C1494-5
C1494-2
G
UB,2.0,450
C1494-3
C1494-6
NY,0.75,1620
I
C1494-4
RO,0.75,1010
HEADER 0290 (K109)
INSTRUMENT PACK (J100)
C0277-5 C0786-5
RO,0.5,805
C0290-16
C0290-15
RO,0.5,550
C0233-20
HEADER 0292 (K109)
H
UB,2.5,560
C0277-7 C0786-7
B,2.0,885
C0292-12
C0292-11
ENGINE CONTROL
MODULE (ECM) (D131)
B
C0162-8 C0448-8
BS,0.5,3070
C0658-29
E
C0162-9 C0448-9
BP,0.5,3070
C0658-4
HEADER-EARTH
0550 (K108)
CLUTCH-COMPRESSOR-AIR
CONDITIONING (A/C) (D149)
A
C0182-1
C0182-2
B,1.5,3180
C0294-5
1 AMP
HEADER 0294 (K109)
B,2.0,430
C0550-3
HEADER 0287 (K109)
C0294-6
C0294-4
B,1.5,2280
C0162-6 C0448-6
B,1.5,950
C0287-5
C0287-4
B,2.0,770
C0550-9
FAN-CONDENSER
(M137)
D
C0280-1
C0280-2
B,2.0,3340
1 AMP

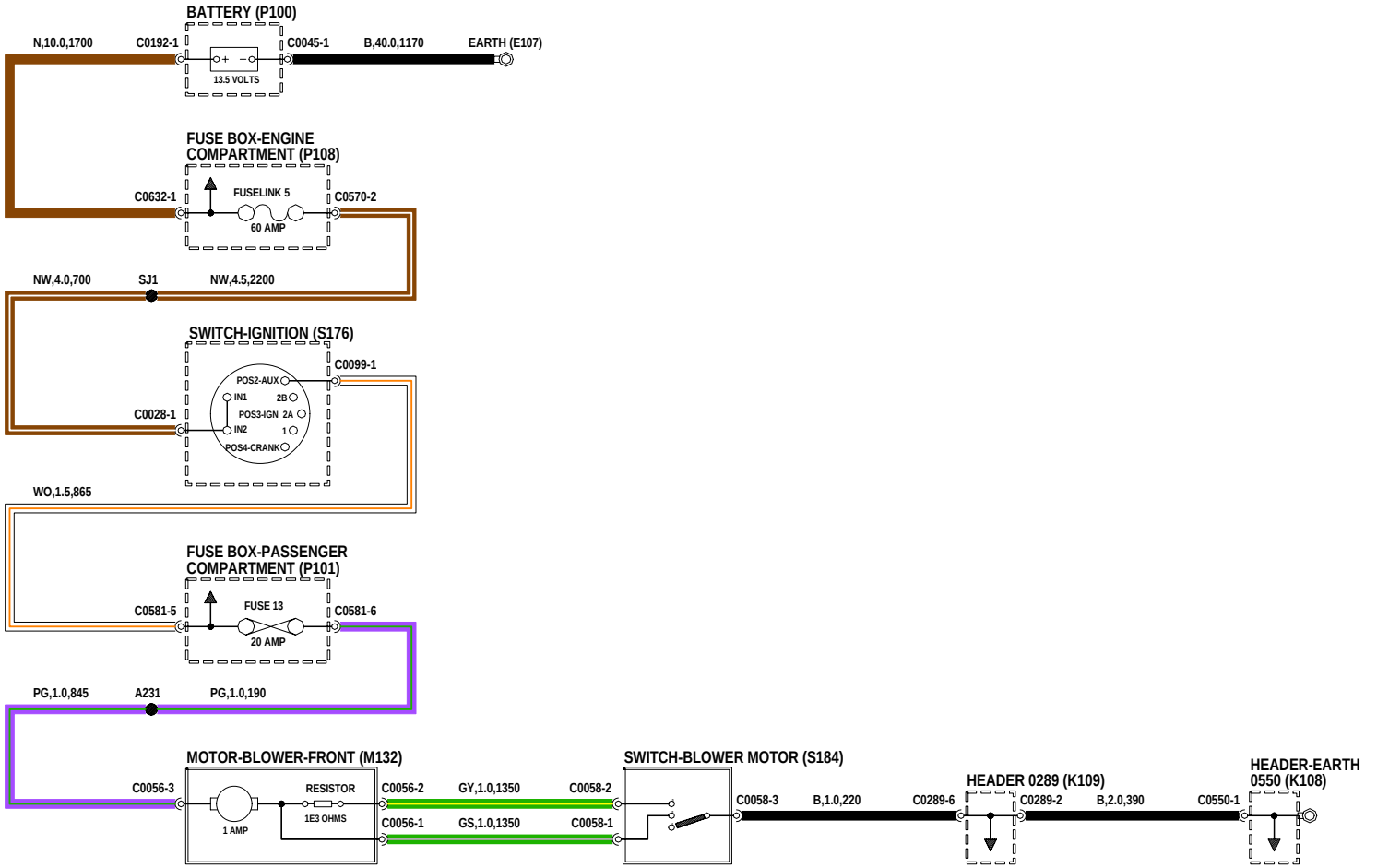
BATTERY (P100)
N,10.0,1700
C0192-1
C0045-1
B,40.0,1170
EARTH (E107)
13.5 VOLTS
FUSE BOX-ENGINE COMPARTMENT (P108)
C0632-1
FUSELINK 5
C0570-2
60 AMP
NW,4.0,700
SJ1
NW,4.5,2200
SWITCH-IGNITION (S176)
C0099-1
POS2-AUX
IN1
2B
POS3-IGN
2A
IN2
1
POS4-CRANK
C0028-1
WO,1.5,865
FUSE BOX-PASSENGER COMPARTMENT (P101)
C0581-5
FUSE 13
C0581-6
20 AMP
PG,1.0,845
A231
PG,1.0,190
MOTOR-BLOWER-FRONT (M132)
C0056-3
RESISTOR
1E3 OHMS
1 AMP
C0056-2
GY,1.0,1350
C0058-2
C0056-1
GS,1.0,1350
C0058-1
SWITCH-BLOWER MOTOR (S184)
C0058-3
B,1.0,220
C0289-6
HEADER 0289 (K109)
C0289-2
B,2.0,390
C0550-1
HEADER-EARTH 0550 (K108)

HEATED REAR WINDOW (HRW)

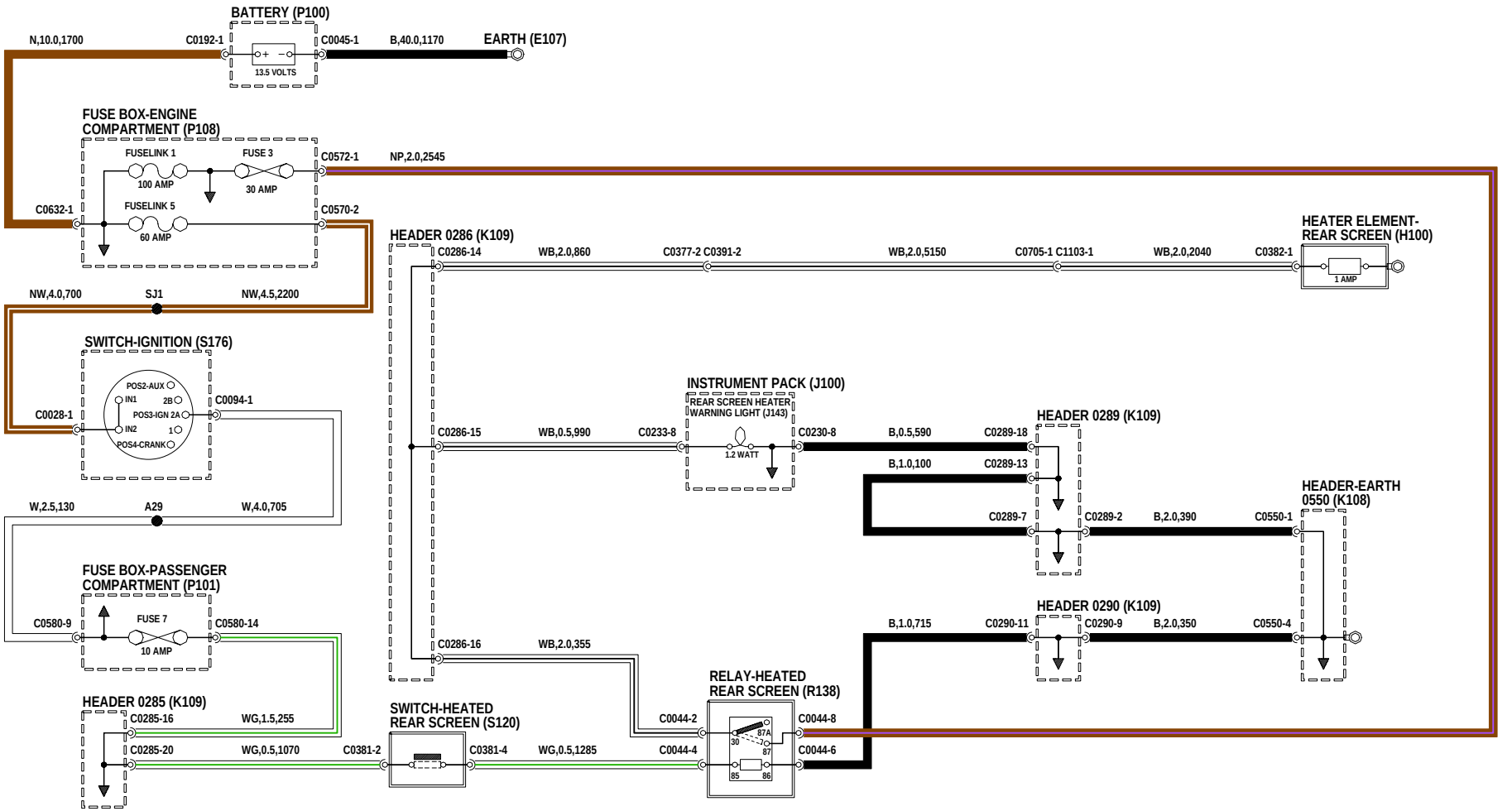

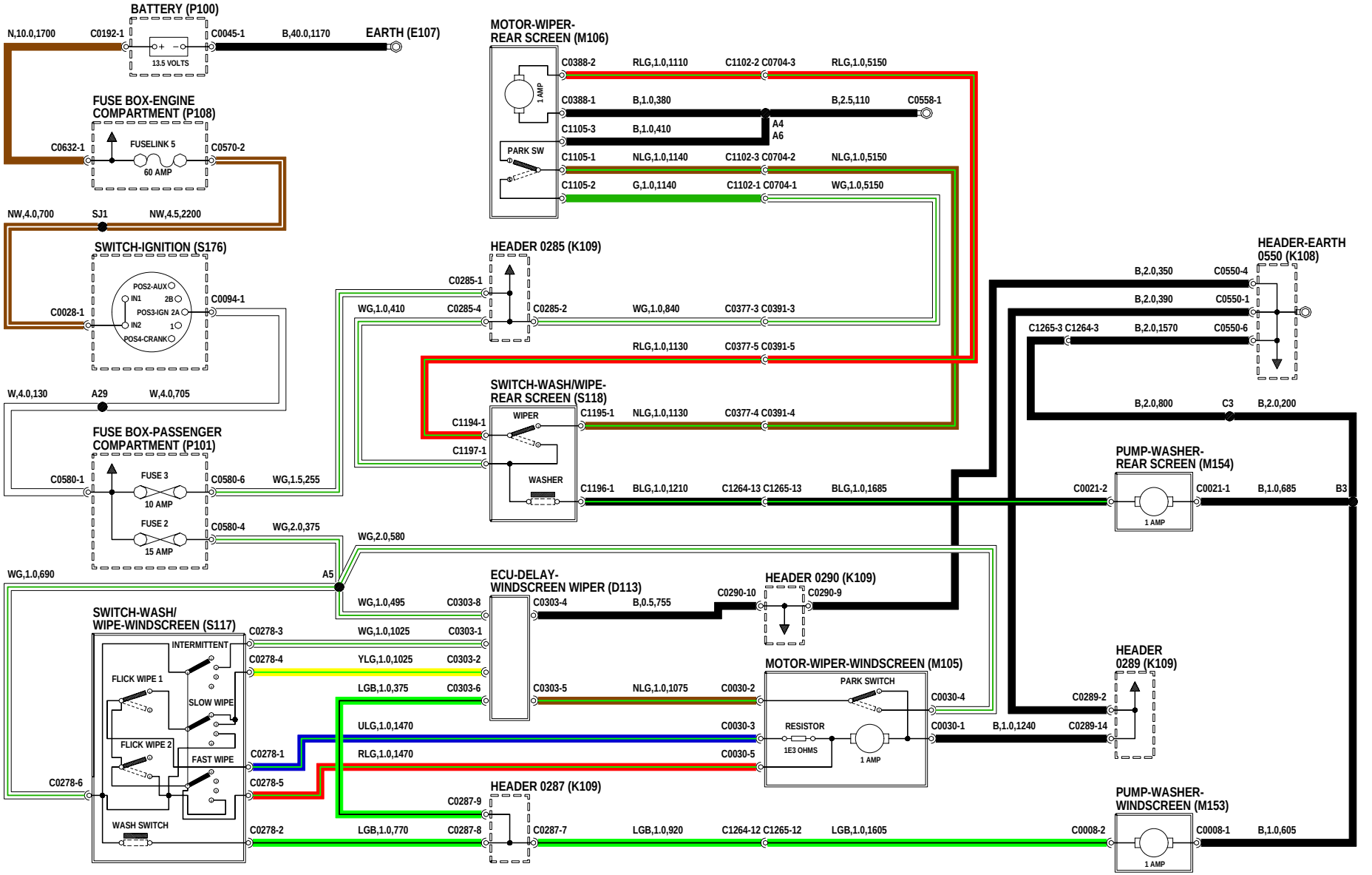
BATTERY (P100)
N,10.0,1700
C0192-1
13.5 VOLTS
C0045-1
B,40.0,1170
EARTH (E107)
FUSE BOX-ENGINE COMPARTMENT (P108)
C0632-1
FUSELINK 5
60 AMP
C0570-2
NW,4.0,700
SJ1
NW,4.5,2200
SWITCH-IGNITION (S176)
POS2-AUX
IN1
2B
POS3-IGN 2A
IN2
1
POS4-CRANK
C0028-1
C0094-1
W,4.0,130
A29
W,4.0,705
FUSE BOX-PASSENGER COMPARTMENT (P101)
C0580-1
FUSE 3
10 AMP
C0580-6
WG,1.5,255
FUSE 2
15 AMP
C0580-4
WG,2.0,375
WG,2.0,580
WG,1.0,690
A5
SWITCH-WASH/ WIPE-WINDSCREEN (S117)
INTERMITTENT
FLICK WIPE 1
SLOW WIPE
FLICK WIPE 2
FAST WIPE
WASH SWITCH
C0278-6
C0278-3
C0278-4
C0278-1
C0278-5
C0278-2
MOTOR-WIPER-REAR SCREEN (M106)
1 AMP
PARK SW
C0388-2
RLG,1.0,1110
C1102-2 C0704-3
RLG,1.0,5150
C0388-1
B,1.0,380
B,2.5,110
C0558-1
C1105-3
B,1.0,410
A4
A6
C1105-1
NLG,1.0,1140
C1102-3 C0704-2
NLG,1.0,5150
C1105-2
G,1.0,1140
C1102-1 C0704-1
WG,1.0,5150
HEADER 0285 (K109)
C0285-1
WG,1.0,410
C0285-4
C0285-2
WG,1.0,840
C0377-3 C0391-3
RLG,1.0,1130
C0377-5 C0391-5
SWITCH-WASH/WIPE-REAR SCREEN (S118)
WIPER
WASHER
C1194-1
C1197-1
C1195-1
NLG,1.0,1130
C0377-4 C0391-4
C1196-1
BLG,1.0,1210
C1264-13 C1265-13
BLG,1.0,1685
HEADER-EARTH 0550 (K108)
B,2.0,350
C0550-4
B,2.0,390
C0550-1
C1265-3 C1264-3
B,2.0,1570
C0550-6
B,2.0,800
C3
B,2.0,200
PUMP-WASHER-REAR SCREEN (M154)
C0021-2
1 AMP
C0021-1
B,1.0,685
B3
ECU-DELAY-WINDSCREEN WIPER (D113)
WG,1.0,495
C0303-8
C0303-4
B,0.5,755
C0290-10
HEADER 0290 (K109)
C0290-9
WG,1.0,1025
C0303-1
YLG,1.0,1025
C0303-2
LGB,1.0,375
C0303-6
C0303-5
NLG,1.0,1075
C0030-2
MOTOR-WIPER-WINDSCREEN (M105)
PARK SWITCH
C0030-4
ULG,1.0,1470
C0030-3
RESISTOR
1E3 OHMS
1 AMP
C0030-1
B,1.0,1240
C0289-14
RLG,1.0,1470
C0030-5
HEADER 0289 (K109)
C0289-2
HEADER 0287 (K109)
C0287-9
C0287-8
C0287-7
LGB,1.0,770
LGB,1.0,920
C1264-12 C1265-12
LGB,1.0,1605
PUMP-WASHER-WINDSCREEN (M153)
C0008-2
1 AMP
C0008-1
B,1.0,605

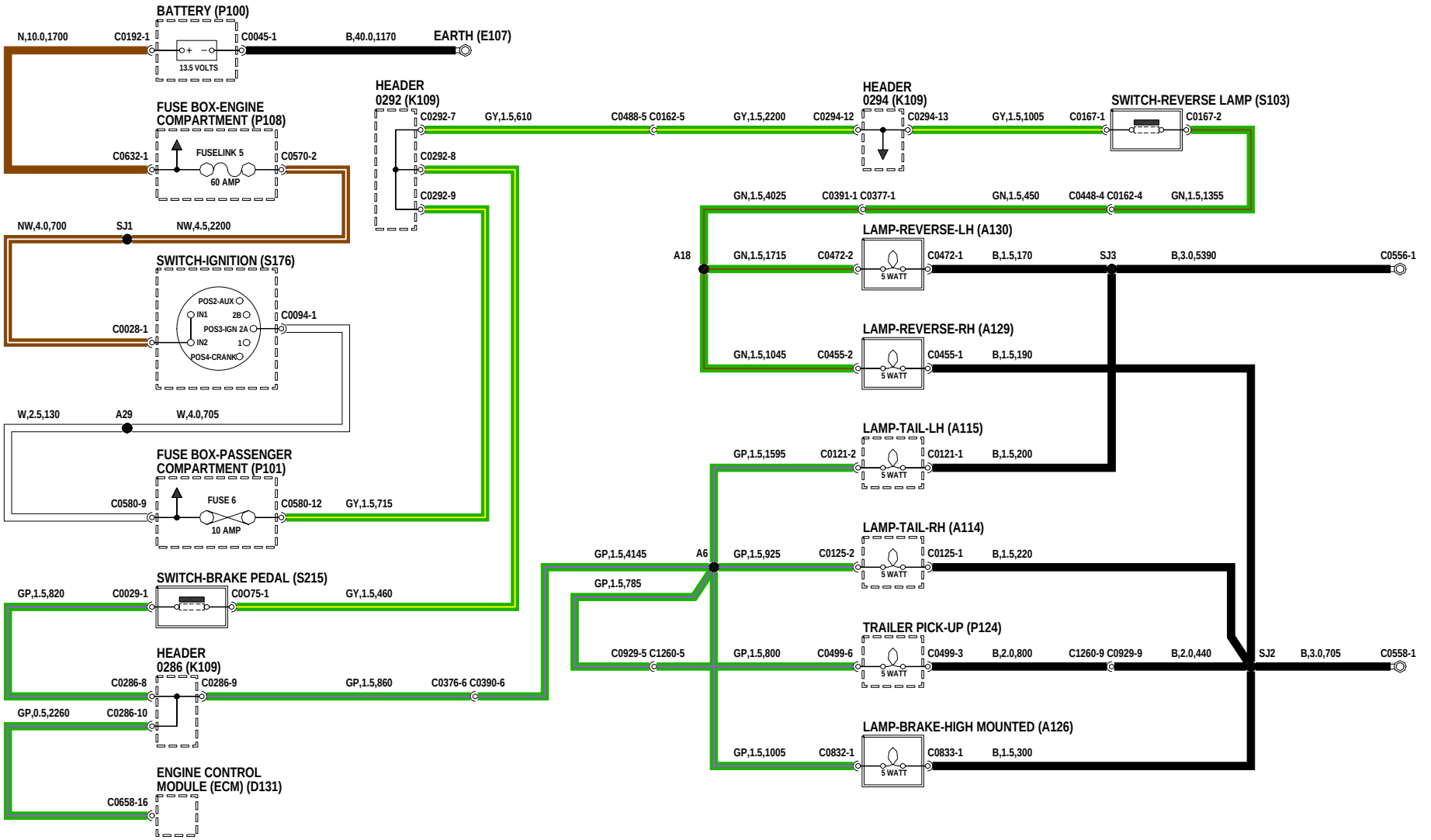
BATTERY (P100)
N,10.0,1700
C0192-1
13.5 VOLTS
C0045-1
B,40.0,1170
EARTH (E107)
FUSE BOX-ENGINE COMPARTMENT (P108)
C0632-1
FUSELINK 5
60 AMP
C0570-2
NW,4.0,700
SJ1
NW,4.5,2200
SWITCH-IGNITION (S176)
POS2-AUX
IN1
2B
POS3-IGN 2A
IN2
1
POS4-CRANK
C0028-1
C0094-1
W,2.5,130
A29
W,4.0,705
FUSE BOX-PASSENGER COMPARTMENT (P101)
C0580-9
FUSE 6
10 AMP
C0580-12
GY,1.5,715
SWITCH-BRAKE PEDAL (S215)
GP,1.5,820
C0029-1
C0075-1
GY,1.5,460
HEADER 0286 (K109)
C0286-8
C0286-9
GP,1.5,860
C0376-6 C0390-6
GP,0.5,2260
C0286-10
ENGINE CONTROL MODULE (ECM) (D131)
C0658-16
HEADER 0292 (K109)
C0292-7
GY,1.5,610
C0488-5 C0162-5
C0292-8
C0292-9
HEADER 0294 (K109)
GY,1.5,2200
C0294-12
C0294-13
GY,1.5,1005
C0167-1
SWITCH-REVERSE LAMP (S103)
C0167-2
GN,1.5,4025
C0391-1 C0377-1
GN,1.5,450
C0448-4 C0162-4
GN,1.5,1355
LAMP-REVERSE-LH (A130)
A18
GN,1.5,1715
C0472-2
5 WATT
C0472-1
B,1.5,170
SJ3
B,3.0,5390
C0556-1
LAMP-REVERSE-RH (A129)
GN,1.5,1045
C0455-2
C0455-1
B,1.5,190
LAMP-TAIL-LH (A115)
GP,1.5,1595
C0121-2
C0121-1
B,1.5,200
LAMP-TAIL-RH (A114)
GP,1.5,4145
A6
GP,1.5,925
C0125-2
C0125-1
B,1.5,220
GP,1.5,785
TRAILER PICK-UP (P124)
C0929-5 C1260-5
GP,1.5,800
C0499-6
C0499-3
B,2.0,800
C1260-9 C0929-9
B,2.0,440
SJ2
B,3.0,705
C0558-1
LAMP-BRAKE-HIGH MOUNTED (A126)
GP,1.5,1005
C0832-1
C0833-1
B,1.5,300

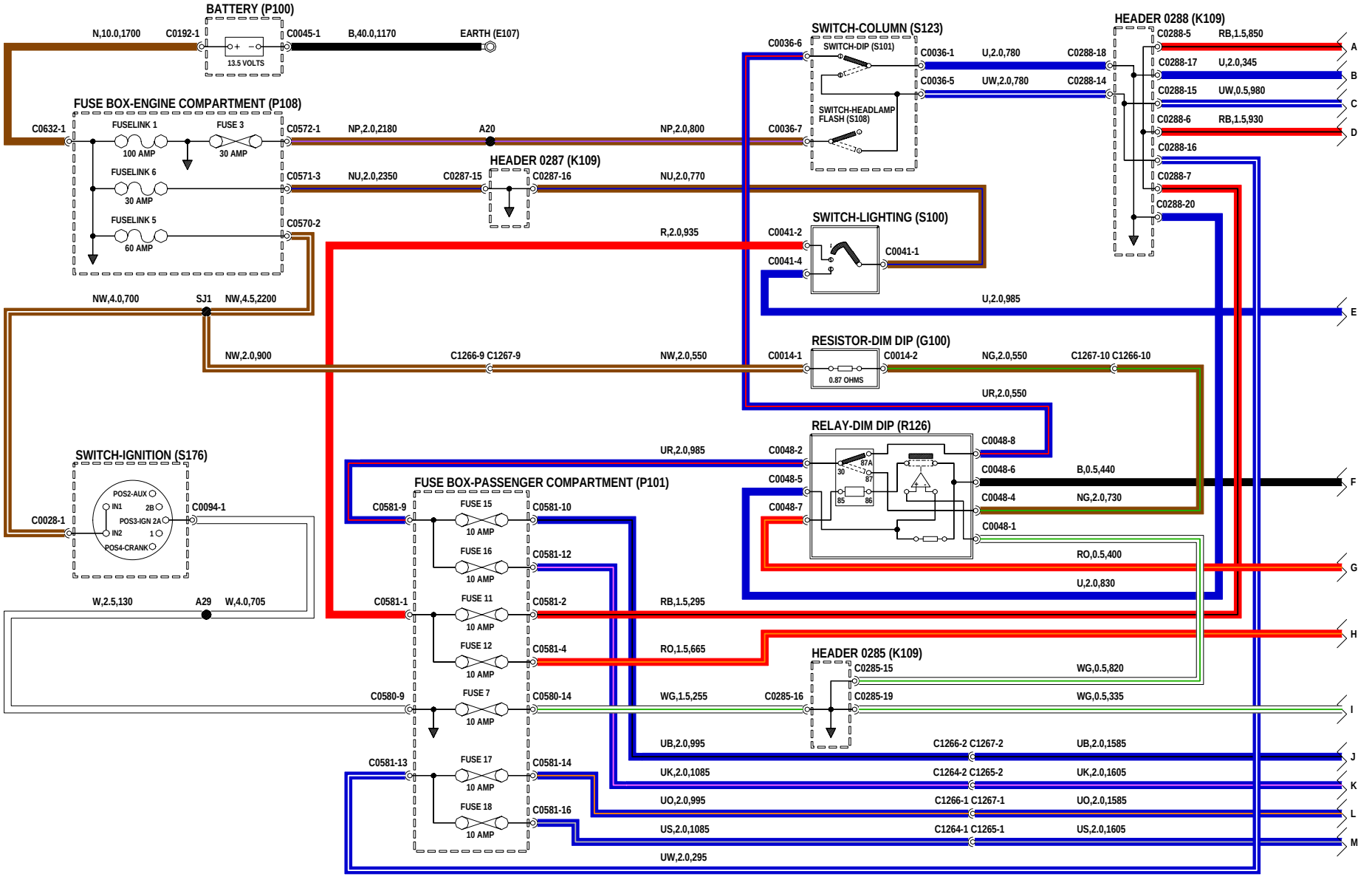
BATTERY (P100)
N,10.0,1700
C0192-1
13.5 VOLTS
C0045-1
B,40.0,1170
EARTH (E107)
FUSE BOX-ENGINE COMPARTMENT (P108)
C0632-1
FUSELINK 1
100 AMP
FUSE 3
30 AMP
FUSELINK 6
30 AMP
FUSELINK 5
60 AMP
C0572-1
NP,2.0,2180
A20
NP,2.0,800
C0571-3
NU,2.0,2350
C0287-15
HEADER 0287 (K109)
C0287-16
NU,2.0,770
C0570-2
R,2.0,935
NW,4.0,700
SJ1
NW,4.5,2200
NW,2.0,900
C1266-9 C1267-9
NW,2.0,550
SWITCH-IGNITION (S176)
POS2-AUX
IN1
2B
POS3-IGN 2A
IN2
1
POS4-CRANK
C0028-1
C0094-1
W,2.5,130
A29
W,4.0,705
FUSE BOX-PASSENGER COMPARTMENT (P101)
C0581-9
FUSE 15
10 AMP
C0581-10
FUSE 16
10 AMP
C0581-12
C0581-1
FUSE 11
10 AMP
C0581-2
RB,1.5,295
FUSE 12
10 AMP
C0581-4
RO,1.5,665
C0580-9
FUSE 7
10 AMP
C0580-14
WG,1.5,255
C0581-13
FUSE 17
10 AMP
C0581-14
FUSE 18
10 AMP
C0581-16
UB,2.0,995
UK,2.0,1085
UO,2.0,995
US,2.0,1085
UW,2.0,295
SWITCH-COLUMN (S123)
C0036-6
SWITCH-DIP (S101)
C0036-1
U,2.0,780
C0288-18
C0036-5
UW,2.0,780
C0288-14
SWITCH-HEADLAMP FLASH (S108)
C0036-7
SWITCH-LIGHTING (S100)
C0041-2
C0041-1
C0041-4
U,2.0,985
RESISTOR-DIM DIP (G100)
C0014-1
0.87 OHMS
C0014-2
NG,2.0,550
C1267-10 C1266-10
UR,2.0,550
RELAY-DIM DIP (R126)
UR,2.0,985
C0048-2
C0048-5
C0048-7
C0048-8
C0048-6
B,0.5,440
C0048-4
NG,2.0,730
C0048-1
RO,0.5,400
U,2.0,830
HEADER 0285 (K109)
C0285-15
WG,0.5,820
C0285-16
C0285-19
WG,0.5,335
C1266-2 C1267-2
UB,2.0,1585
C1264-2 C1265-2
UK,2.0,1605
C1266-1 C1267-1
UO,2.0,1585
C1264-1 C1265-1
US,2.0,1605
HEADER 0288 (K109)
C0288-5
RB,1.5,850
C0288-17
U,2.0,345
C0288-15
UW,0.5,980
C0288-6
RB,1.5,930
C0288-16
C0288-7
C0288-20
A
B
C
D
E
F
G
H
I
J
K
L
M

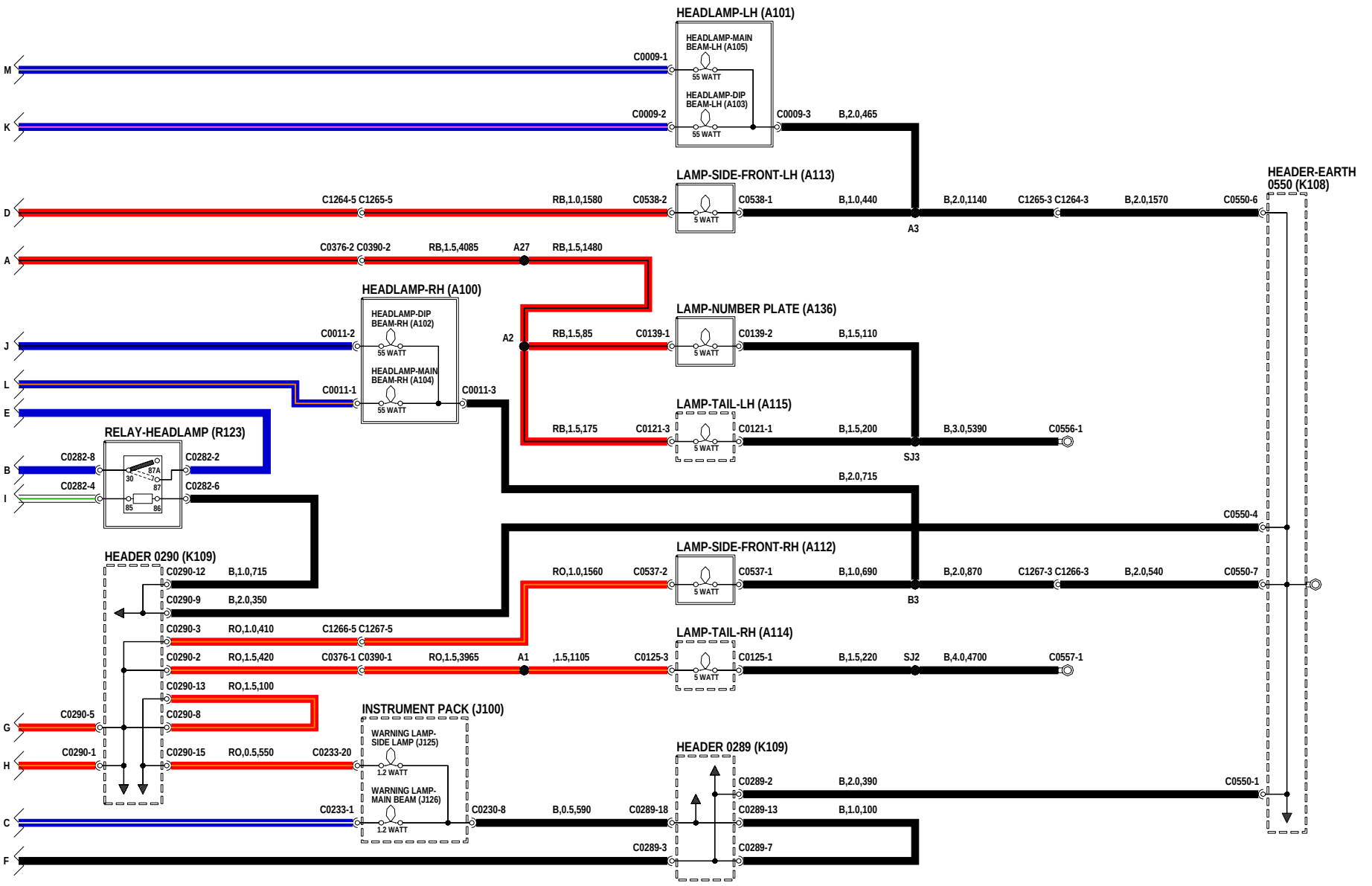
HEADLAMP-LH (A101)
HEADLAMP-MAIN BEAM-LH (A105)
HEADLAMP-DIP BEAM-LH (A103)
55 WATT
LAMP-SIDE-FRONT-LH (A113)
5 WATT
HEADER-EARTH 0550 (K108)
HEADLAMP-RH (A100)
HEADLAMP-DIP BEAM-RH (A102)
HEADLAMP-MAIN BEAM-RH (A104)
LAMP-NUMBER PLATE (A136)
LAMP-TAIL-LH (A115)
RELAY-HEADLAMP (R123)
87A
30
87
85
86
HEADER 0290 (K109)
LAMP-SIDE-FRONT-RH (A112)
LAMP-TAIL-RH (A114)
INSTRUMENT PACK (J100)
WARNING LAMP-SIDE LAMP (J125)
1.2 WATT
WARNING LAMP-MAIN BEAM (J126)
HEADER 0289 (K109)
M
K
D
A
J
L
E
B
I
G
H
C
F
C0009-1
C0009-2
C0009-3
B,2.0,465
C1264-5 C1265-5
RB,1.0,1580
C0538-2
C0538-1
B,1.0,440
A3
B,2.0,1140
C1265-3 C1264-3
B,2.0,1570
C0550-6
C0376-2 C0390-2
RB,1.5,4085
A27
RB,1.5,1480
C0011-2
C0011-1
C0011-3
A2
RB,1.5,85
C0139-1
C0139-2
B,1.5,110
RB,1.5,175
C0121-3
C0121-1
B,1.5,200
SJ3
B,3.0,5390
C0556-1
C0282-8
C0282-2
C0282-4
C0282-6
B,2.0,715
C0550-4
C0290-12
B,1.0,715
C0290-9
B,2.0,350
RO,1.0,1560
C0537-2
C0537-1
B,1.0,690
B3
B,2.0,870
C1267-3 C1266-3
B,2.0,540
C0550-7
C0290-3
RO,1.0,410
C1266-5 C1267-5
C0290-2
RO,1.5,420
C0376-1 C0390-1
RO,1.5,3965
A1
,1.5,1105
C0125-3
C0125-1
B,1.5,220
SJ2
B,4.0,4700
C0557-1
C0290-13
RO,1.5,100
C0290-5
C0290-8
C0290-1
C0290-15
RO,0.5,550
C0233-20
C0233-1
C0230-8
B,0.5,590
C0289-18
C0289-3
C0289-2
B,2.0,390
C0550-1
C0289-13
B,1.0,100
C0289-7

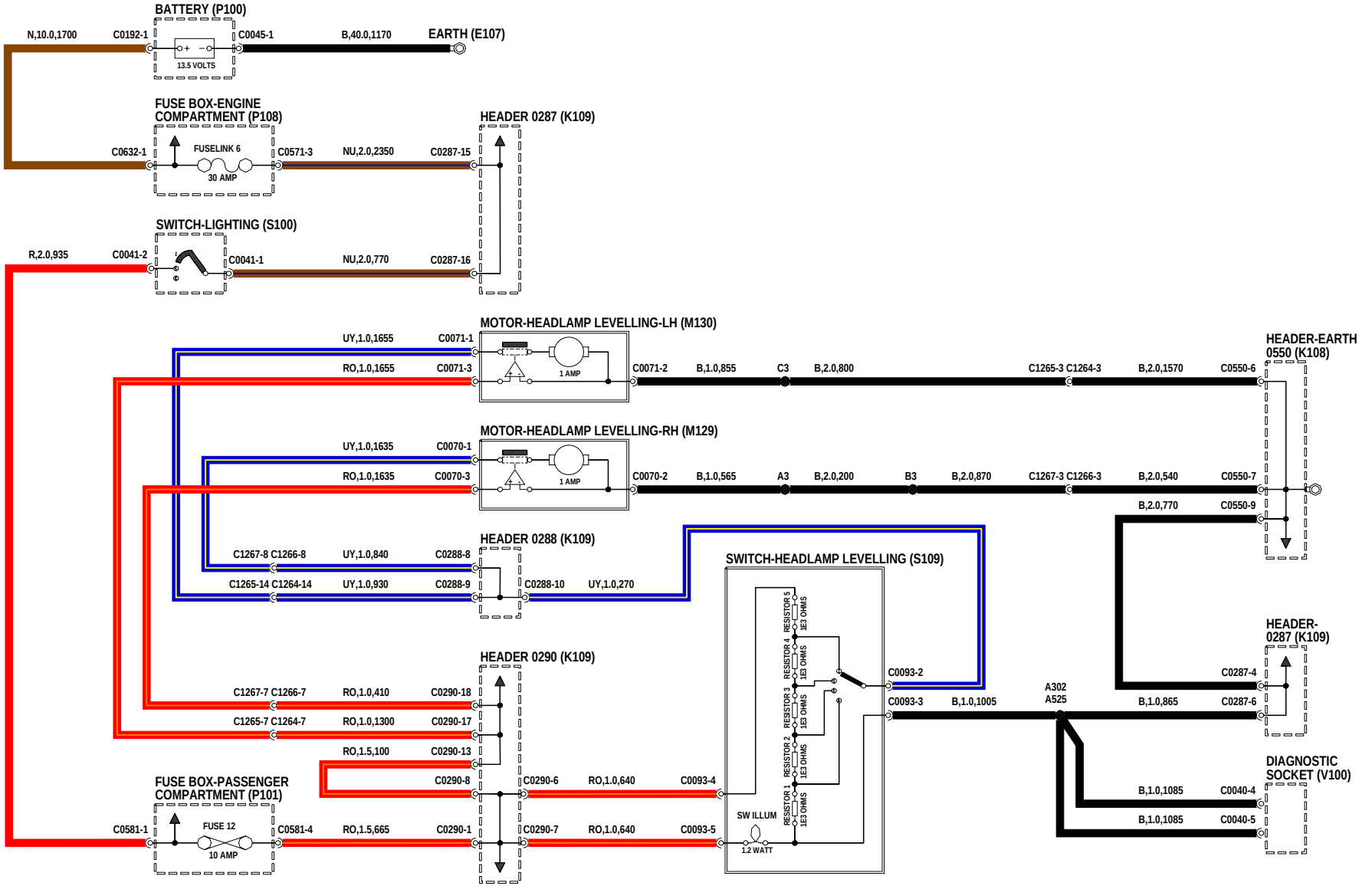
BATTERY (P100)
N,10.0,1700
C0192-1
13.5 VOLTS
C0045-1
B,40.0,1170
EARTH (E107)
FUSE BOX-ENGINE COMPARTMENT (P108)
C0632-1
FUSELINK 6
30 AMP
C0571-3
NU,2.0,2350
C0287-15
HEADER 0287 (K109)
SWITCH-LIGHTING (S100)
R,2.0,935
C0041-2
C0041-1
NU,2.0,770
C0287-16
MOTOR-HEADLAMP LEVELLING-LH (M130)
UY,1.0,1655
C0071-1
RO,1.0,1655
C0071-3
1 AMP
C0071-2
B,1.0,855
C3
B,2.0,800
C1265-3 C1264-3
B,2.0,1570
C0550-6
HEADER-EARTH 0550 (K108)
MOTOR-HEADLAMP LEVELLING-RH (M129)
UY,1.0,1635
C0070-1
RO,1.0,1635
C0070-3
1 AMP
C0070-2
B,1.0,565
A3
B,2.0,200
B3
B,2.0,870
C1267-3 C1266-3
B,2.0,540
C0550-7
B,2.0,770
C0550-9
HEADER 0288 (K109)
C1267-8 C1266-8
UY,1.0,840
C0288-8
C1265-14 C1264-14
UY,1.0,930
C0288-9
C0288-10
UY,1.0,270
SWITCH-HEADLAMP LEVELLING (S109)
RESISTOR 5
RESISTOR 4
RESISTOR 3
RESISTOR 2
RESISTOR 1
1E3 OHMS
SW ILLUM
1.2 WATT
HEADER 0290 (K109)
C1267-7 C1266-7
RO,1.0,410
C0290-18
C1265-7 C1264-7
RO,1.0,1300
C0290-17
RO,1.5,100
C0290-13
C0290-8
C0290-6
RO,1.0,640
C0093-4
C0290-7
C0093-5
C0093-2
C0093-3
B,1.0,1005
A302
A525
HEADER-0287 (K109)
C0287-4
B,1.0,865
C0287-6
DIAGNOSTIC SOCKET (V100)
B,1.0,1085
C0040-4
B,1.0,1085
C0040-5
FUSE BOX-PASSENGER COMPARTMENT (P101)
C0581-1
FUSE 12
10 AMP
C0581-4
RO,1.5,665
C0290-1

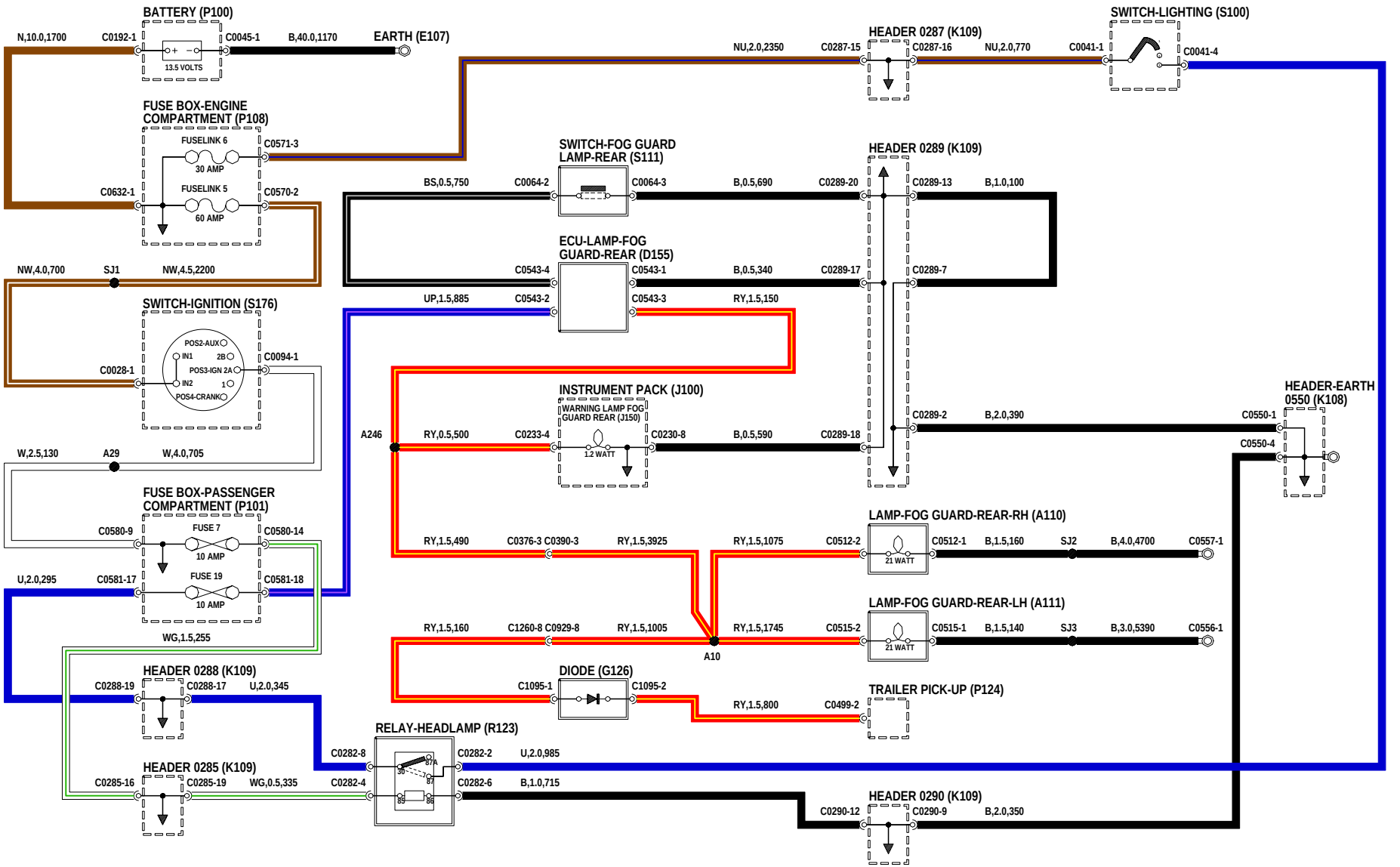
BATTERY (P100)
N,10.0,1700
C0192-1
13.5 VOLTS
C0045-1
B,40.0,1170
EARTH (E107)
FUSE BOX-ENGINE COMPARTMENT (P108)
FUSELINK 6
30 AMP
C0571-3
C0632-1
FUSELINK 5
60 AMP
C0570-2
NW,4.0,700
SJ1
NW,4.5,2200
SWITCH-IGNITION (S176)
POS2-AUX
IN1
2B
POS3-IGN 2A
C0094-1
C0028-1
IN2
1
POS4-CRANK
W,2.5,130
A29
W,4.0,705
FUSE BOX-PASSENGER COMPARTMENT (P101)
C0580-9
FUSE 7
10 AMP
C0580-14
U,2.0,295
C0581-17
FUSE 19
10 AMP
C0581-18
WG,1.5,255
HEADER 0288 (K109)
C0288-19
C0288-17
U,2.0,345
HEADER 0285 (K109)
C0285-16
C0285-19
WG,0.5,335
RELAY-HEADLAMP (R123)
C0282-8
87A
30
87
85
86
C0282-4
C0282-2
U,2.0,985
C0282-6
B,1.0,715
HEADER 0287 (K109)
NU,2.0,2350
C0287-15
C0287-16
NU,2.0,770
C0041-1
SWITCH-LIGHTING (S100)
C0041-4
SWITCH-FOG GUARD LAMP-REAR (S111)
BS,0.5,750
C0064-2
C0064-3
B,0.5,690
C0289-20
HEADER 0289 (K109)
C0289-13
B,1.0,100
ECU-LAMP-FOG GUARD-REAR (D155)
C0543-4
C0543-1
B,0.5,340
C0289-17
C0289-7
UP,1.5,885
C0543-2
C0543-3
RY,1.5,150
INSTRUMENT PACK (J100)
WARNING LAMP FOG GUARD REAR (J150)
A246
RY,0.5,500
C0233-4
1.2 WATT
C0230-8
B,0.5,590
C0289-18
C0289-2
B,2.0,390
C0550-1
HEADER-EARTH 0550 (K108)
C0550-4
LAMP-FOG GUARD-REAR-RH (A110)
RY,1.5,490
C0376-3
C0390-3
RY,1.5,3925
RY,1.5,1075
C0512-2
21 WATT
C0512-1
B,1.5,160
SJ2
B,4.0,4700
C0557-1
LAMP-FOG GUARD-REAR-LH (A111)
RY,1.5,160
C1260-8
C0929-8
RY,1.5,1005
A10
RY,1.5,1745
C0515-2
21 WATT
C0515-1
B,1.5,140
SJ3
B,3.0,5390
C0556-1
DIODE (G126)
C1095-1
C1095-2
RY,1.5,800
C0499-2
TRAILER PICK-UP (P124)
HEADER 0290 (K109)
C0290-12
C0290-9
B,2.0,350

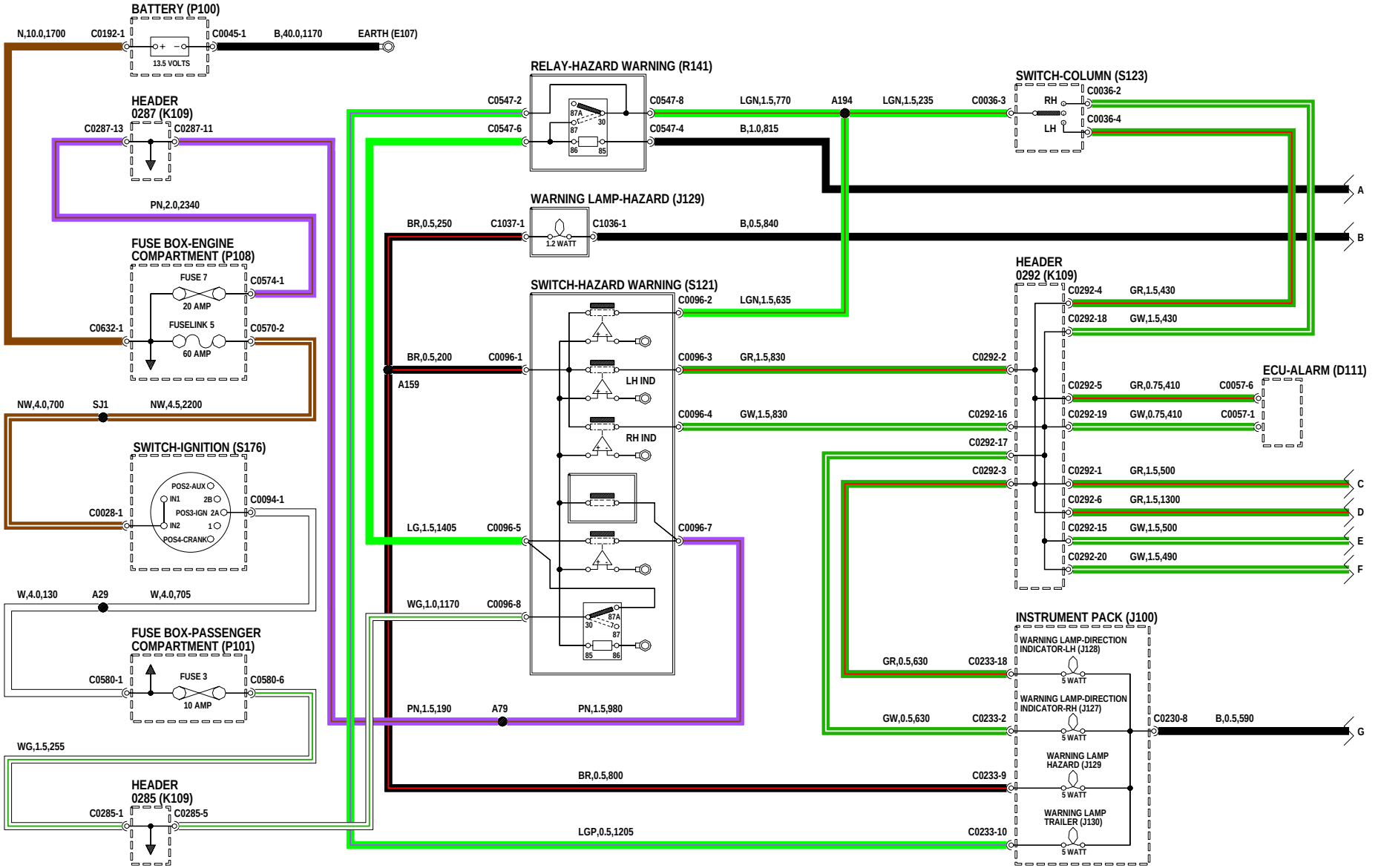
BATTERY (P100)
N,10.0,1700
C0192-1
13.5 VOLTS
C0045-1
B,40.0,1170
EARTH (E107)
HEADER
0287 (K109)
C0287-13
C0287-11
PN,2.0,2340
FUSE BOX-ENGINE
COMPARTMENT (P108)
FUSE 7
20 AMP
C0574-1
C0632-1
FUSELINK 5
60 AMP
C0570-2
NW,4.0,700
SJ1
NW,4.5,2200
SWITCH-IGNITION (S176)
POS2-AUX
IN1
2B
POS3-IGN
2A
IN2
1
POS4-CRANK
C0094-1
C0028-1
W,4.0,130
A29
W,4.0,705
FUSE BOX-PASSENGER
COMPARTMENT (P101)
C0580-1
FUSE 3
10 AMP
C0580-6
WG,1.5,255
HEADER
0285 (K109)
C0285-1
C0285-5
RELAY-HAZARD WARNING (R141)
C0547-2
C0547-6
87A
30
87
86
85
C0547-8
C0547-4
LGN,1.5,770
B,1.0,815
A194
LGN,1.5,235
C0036-3
SWITCH-COLUMN (S123)
RH
LH
C0036-2
C0036-4
A
B
WARNING LAMP-HAZARD (J129)
BR,0.5,250
C1037-1
1.2 WATT
C1036-1
B,0.5,840
SWITCH-HAZARD WARNING (S121)
C0096-2
LGN,1.5,635
BR,0.5,200
C0096-1
A159
LH IND
C0096-3
GR,1.5,830
C0292-2
RH IND
C0096-4
GW,1.5,830
C0292-16
C0292-17
LG,1.5,1405
C0096-5
C0096-7
WG,1.0,1170
C0096-8
PN,1.5,190
A79
PN,1.5,980
HEADER
0292 (K109)
C0292-4
GR,1.5,430
C0292-18
GW,1.5,430
C0292-5
GR,0.75,410
C0057-6
C0292-19
GW,0.75,410
C0057-1
ECU-ALARM (D111)
C0292-3
C0292-1
GR,1.5,500
C0292-6
GR,1.5,1300
C0292-15
GW,1.5,500
C0292-20
GW,1.5,490
C
D
E
F
INSTRUMENT PACK (J100)
WARNING LAMP-DIRECTION
INDICATOR-LH (J128)
5 WATT
GR,0.5,630
C0233-18
WARNING LAMP-DIRECTION
INDICATOR-RH (J127)
GW,0.5,630
C0233-2
C0230-8
B,0.5,590
G
WARNING LAMP
HAZARD (J129
BR,0.5,800
C0233-9
WARNING LAMP
TRAILER (J130)
LGP,0.5,1205
C0233-10

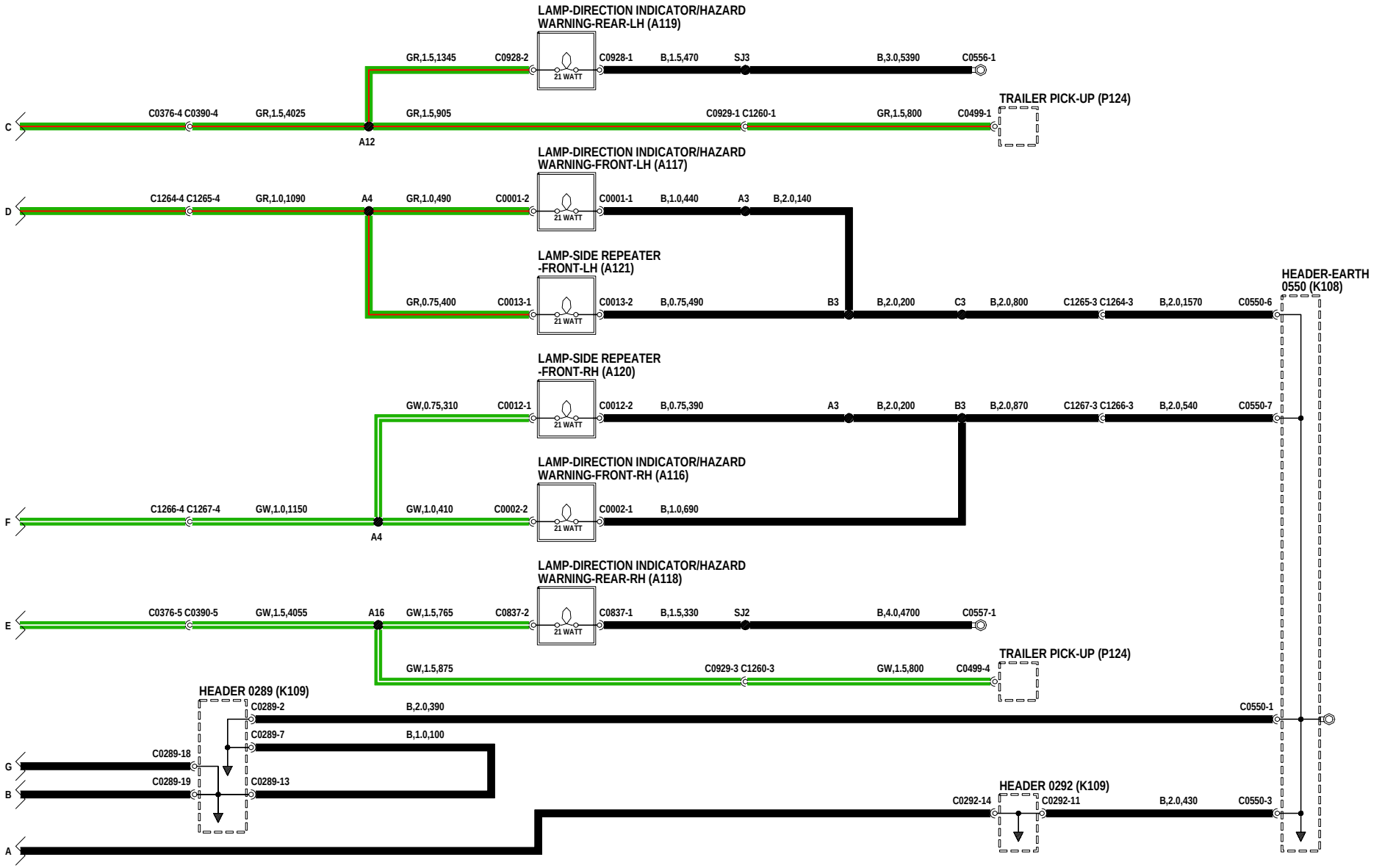
LAMP-DIRECTION INDICATOR/HAZARD WARNING-REAR-LH (A119)
GR,1.5,1345
C0928-2
21 WATT
C0928-1
B,1.5,470
SJ3
B,3.0,5390
C0556-1
TRAILER PICK-UP (P124)
C
C0376-4 C0390-4
GR,1.5,4025
A12
GR,1.5,905
C0929-1 C1260-1
GR,1.5,800
C0499-1
LAMP-DIRECTION INDICATOR/HAZARD WARNING-FRONT-LH (A117)
D
C1264-4 C1265-4
GR,1.0,1090
A4
GR,1.0,490
C0001-2
C0001-1
B,1.0,440
A3
B,2.0,140
LAMP-SIDE REPEATER -FRONT-LH (A121)
GR,0.75,400
C0013-1
C0013-2
B,0.75,490
B3
B,2.0,200
C3
B,2.0,800
C1265-3 C1264-3
B,2.0,1570
C0550-6
HEADER-EARTH 0550 (K108)
LAMP-SIDE REPEATER -FRONT-RH (A120)
GW,0.75,310
C0012-1
C0012-2
B,0.75,390
A3
B,2.0,200
B3
B,2.0,870
C1267-3 C1266-3
B,2.0,540
C0550-7
LAMP-DIRECTION INDICATOR/HAZARD WARNING-FRONT-RH (A116)
F
C1266-4 C1267-4
GW,1.0,1150
A4
GW,1.0,410
C0002-2
C0002-1
B,1.0,690
LAMP-DIRECTION INDICATOR/HAZARD WARNING-REAR-RH (A118)
E
C0376-5 C0390-5
GW,1.5,4055
A16
GW,1.5,765
C0837-2
C0837-1
B,1.5,330
SJ2
B,4.0,4700
C0557-1
TRAILER PICK-UP (P124)
GW,1.5,875
C0929-3 C1260-3
GW,1.5,800
C0499-4
HEADER 0289 (K109)
C0289-2
B,2.0,390
C0550-1
C0289-7
B,1.0,100
G
C0289-18
B
C0289-19
C0289-13
HEADER 0292 (K109)
C0292-14
C0292-11
B,2.0,430
C0550-3
A

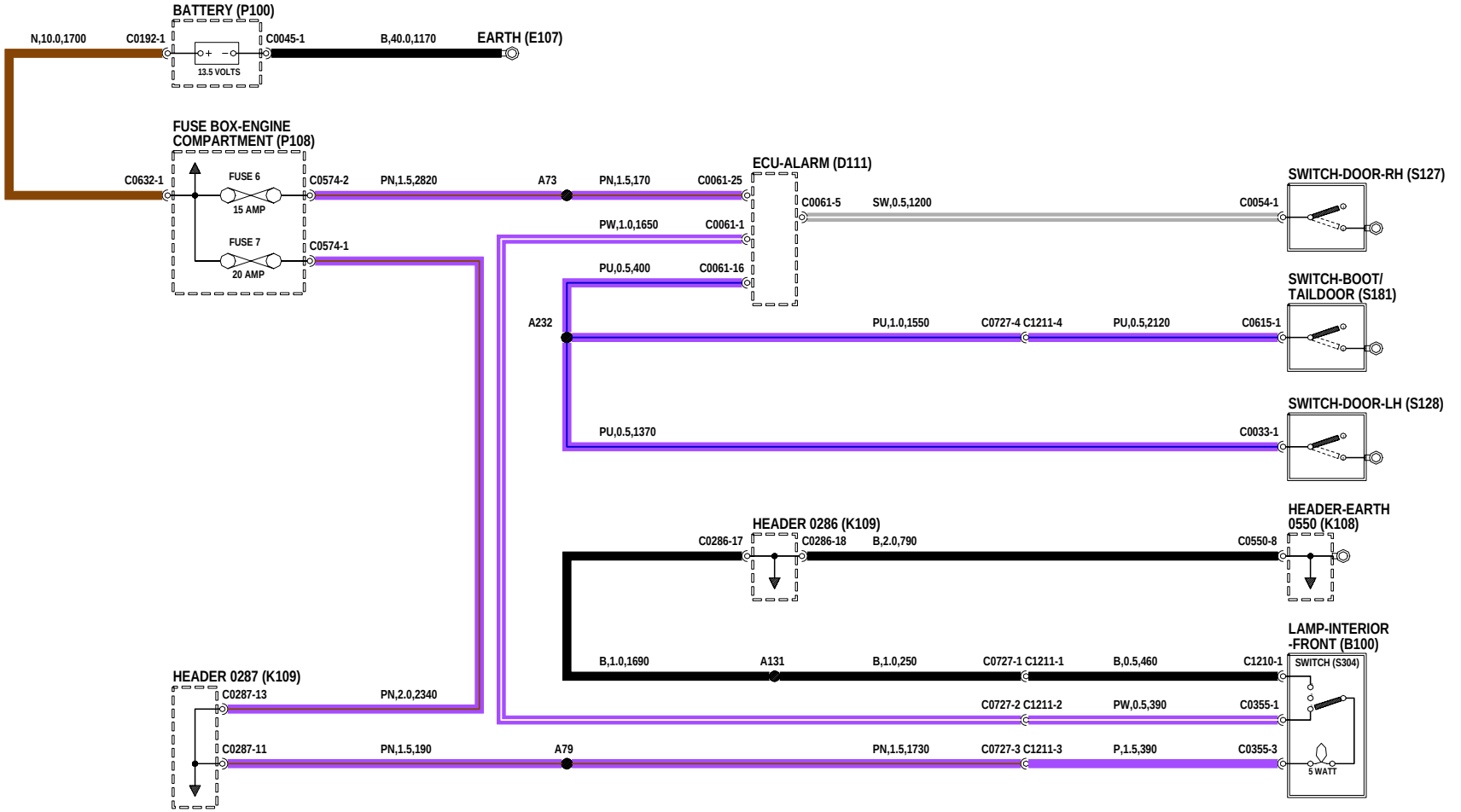
BATTERY (P100)
N,10.0,1700
C0192-1
13.5 VOLTS
C0045-1
B,40.0,1170
EARTH (E107)
FUSE BOX-ENGINE COMPARTMENT (P108)
C0632-1
FUSE 6
15 AMP
FUSE 7
20 AMP
C0574-2
C0574-1
PN,1.5,2820
A73
PN,1.5,170
C0061-25
ECU-ALARM (D111)
C0061-5
SW,0.5,1200
C0054-1
SWITCH-DOOR-RH (S127)
PW,1.0,1650
C0061-1
PU,0.5,400
C0061-16
A232
PU,1.0,1550
C0727-4 C1211-4
PU,0.5,2120
C0615-1
SWITCH-BOOT/ TAILDOOR (S181)
PU,0.5,1370
C0033-1
SWITCH-DOOR-LH (S128)
HEADER 0286 (K109)
C0286-17
C0286-18
B,2.0,790
C0550-8
HEADER-EARTH 0550 (K108)
B,1.0,1690
A131
B,1.0,250
C0727-1 C1211-1
B,0.5,460
C1210-1
LAMP-INTERIOR -FRONT (B100)
SWITCH (S304)
HEADER 0287 (K109)
C0287-13
PN,2.0,2340
C0727-2 C1211-2
PW,0.5,390
C0355-1
C0287-11
PN,1.5,190
A79
PN,1.5,1730
C0727-3 C1211-3
P,1.5,390
C0355-3
5 WATT

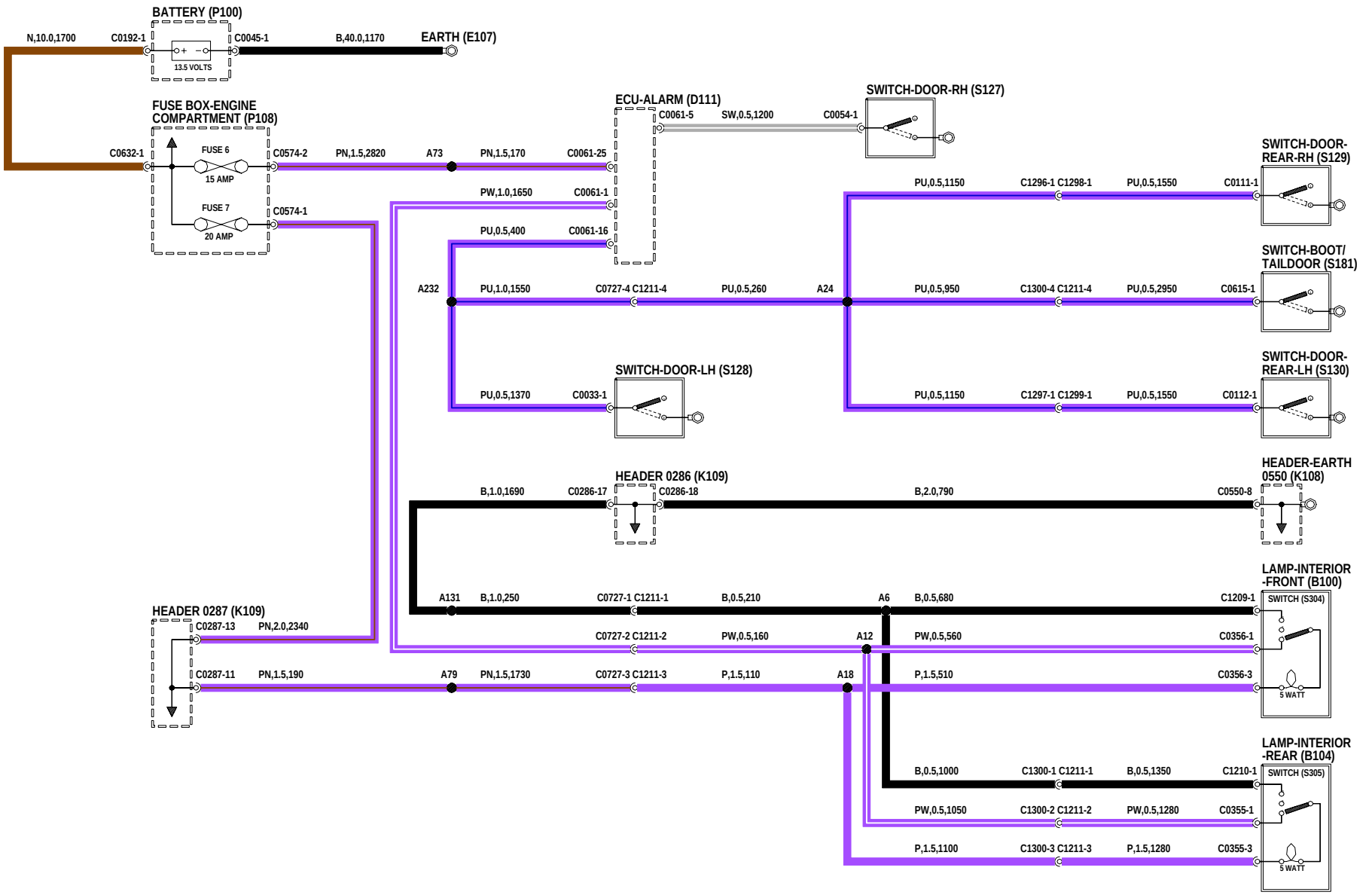
BATTERY (P100)
N,10.0,1700
C0192-1
13.5 VOLTS
C0045-1
B,40.0,1170
EARTH (E107)
FUSE BOX-ENGINE COMPARTMENT (P108)
C0632-1
FUSE 6
15 AMP
FUSE 7
20 AMP
C0574-2
PN,1.5,2820
A73
PN,1.5,170
C0061-25
C0574-1
ECU-ALARM (D111)
C0061-5
SW,0.5,1200
C0054-1
SWITCH-DOOR-RH (S127)
PW,1.0,1650
C0061-1
PU,0.5,400
C0061-16
A232
PU,1.0,1550
C0727-4 C1211-4
PU,0.5,260
A24
PU,0.5,1150
C1296-1 C1298-1
PU,0.5,1550
C0111-1
SWITCH-DOOR-REAR-RH (S129)
PU,0.5,950
C1300-4 C1211-4
PU,0.5,2950
C0615-1
SWITCH-BOOT/ TAILDOOR (S181)
PU,0.5,1370
C0033-1
SWITCH-DOOR-LH (S128)
PU,0.5,1150
C1297-1 C1299-1
PU,0.5,1550
C0112-1
SWITCH-DOOR-REAR-LH (S130)
B,1.0,1690
C0286-17
HEADER 0286 (K109)
C0286-18
B,2.0,790
C0550-8
HEADER-EARTH 0550 (K108)
A131
B,1.0,250
C0727-1 C1211-1
B,0.5,210
A6
B,0.5,680
C1209-1
SWITCH (S304)
LAMP-INTERIOR -FRONT (B100)
HEADER 0287 (K109)
C0287-13
PN,2.0,2340
C0727-2 C1211-2
PW,0.5,160
A12
PW,0.5,560
C0356-1
C0287-11
PN,1.5,190
A79
PN,1.5,1730
C0727-3 C1211-3
P,1.5,110
A18
P,1.5,510
C0356-3
5 WATT
B,0.5,1000
C1300-1 C1211-1
B,0.5,1350
C1210-1
SWITCH (S305)
LAMP-INTERIOR -REAR (B104)
PW,0.5,1050
C1300-2 C1211-2
PW,0.5,1280
C0355-1
P,1.5,1100
C1300-3 C1211-3
P,1.5,1280
C0355-3
5 WATT

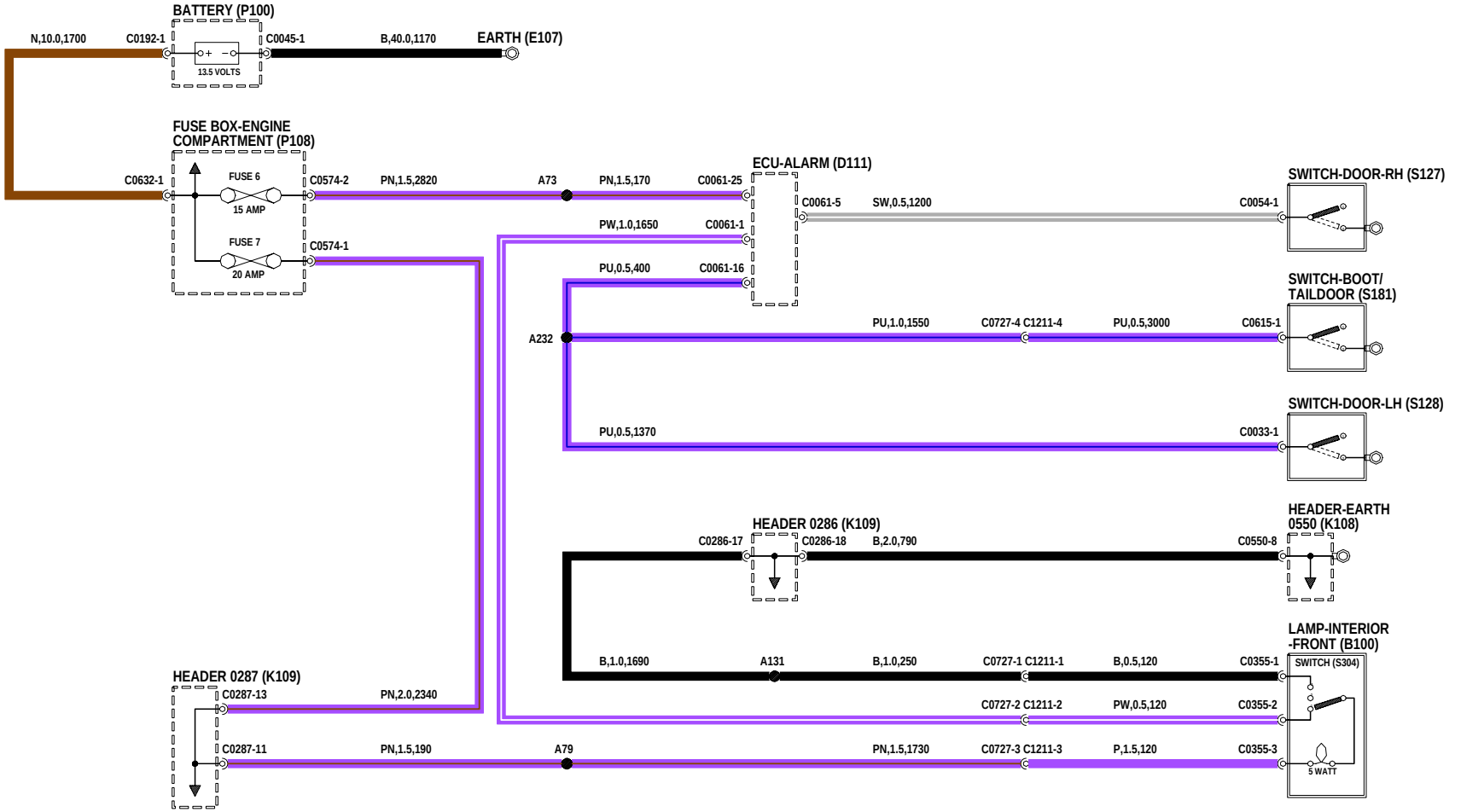
BATTERY (P100)
N,10.0,1700
C0192-1
13.5 VOLTS
C0045-1
B,40.0,1170
EARTH (E107)
FUSE BOX-ENGINE COMPARTMENT (P108)
C0632-1
FUSE 6
15 AMP
FUSE 7
20 AMP
C0574-2
C0574-1
PN,1.5,2820
A73
PN,1.5,170
C0061-25
ECU-ALARM (D111)
C0061-5
SW,0.5,1200
C0054-1
SWITCH-DOOR-RH (S127)
PW,1.0,1650
C0061-1
PU,0.5,400
C0061-16
SWITCH-BOOT/ TAILDOOR (S181)
A232
PU,1.0,1550
C0727-4 C1211-4
PU,0.5,3000
C0615-1
SWITCH-DOOR-LH (S128)
PU,0.5,1370
C0033-1
HEADER 0286 (K109)
C0286-17
C0286-18
B,2.0,790
C0550-8
HEADER-EARTH 0550 (K108)
LAMP-INTERIOR -FRONT (B100)
SWITCH (S304)
B,1.0,1690
A131
B,1.0,250
C0727-1 C1211-1
B,0.5,120
C0355-1
HEADER 0287 (K109)
C0287-13
PN,2.0,2340
C0727-2 C1211-2
PW,0.5,120
C0355-2
C0287-11
PN,1.5,190
A79
PN,1.5,1730
C0727-3 C1211-3
P,1.5,120
C0355-3
5 WATT

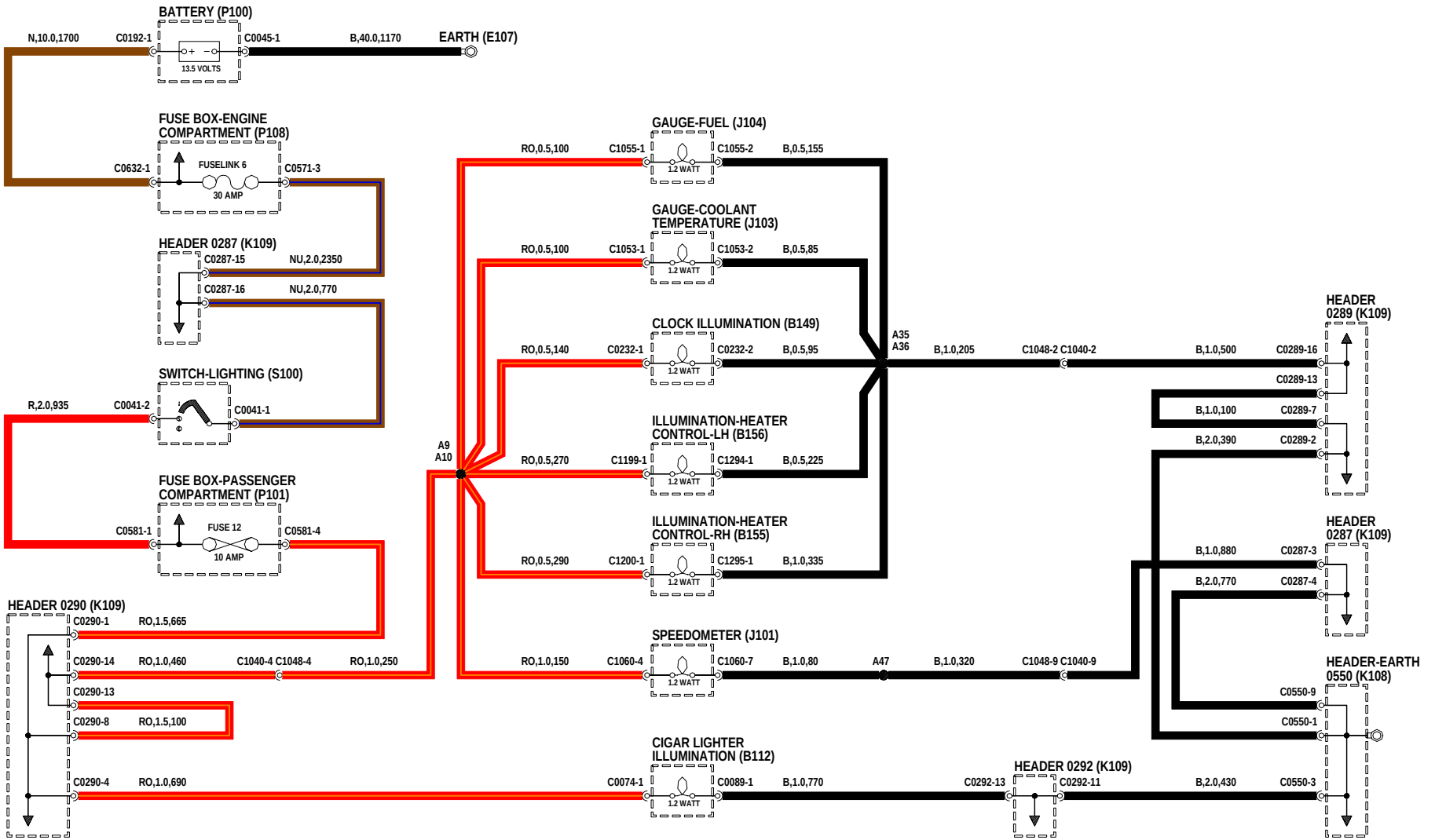
BATTERY (P100)
N,10.0,1700
C0192-1
13.5 VOLTS
C0045-1
B,40.0,1170
EARTH (E107)
FUSE BOX-ENGINE COMPARTMENT (P108)
C0632-1
FUSELINK 6
30 AMP
C0571-3
HEADER 0287 (K109)
C0287-15
NU,2.0,2350
C0287-16
NU,2.0,770
SWITCH-LIGHTING (S100)
R,2.0,935
C0041-2
C0041-1
FUSE BOX-PASSENGER COMPARTMENT (P101)
C0581-1
FUSE 12
10 AMP
C0581-4
HEADER 0290 (K109)
C0290-1
RO,1.5,665
C0290-14
RO,1.0,460
C1040-4 C1048-4
RO,1.0,250
C0290-13
C0290-8
RO,1.5,100
C0290-4
RO,1.0,690
A9
A10
GAUGE-FUEL (J104)
RO,0.5,100
C1055-1
1.2 WATT
C1055-2
B,0.5,155
GAUGE-COOLANT TEMPERATURE (J103)
RO,0.5,100
C1053-1
1.2 WATT
C1053-2
B,0.5,85
CLOCK ILLUMINATION (B149)
RO,0.5,140
C0232-1
1.2 WATT
C0232-2
B,0.5,95
ILLUMINATION-HEATER CONTROL-LH (B156)
RO,0.5,270
C1199-1
1.2 WATT
C1294-1
B,0.5,225
ILLUMINATION-HEATER CONTROL-RH (B155)
RO,0.5,290
C1200-1
1.2 WATT
C1295-1
B,1.0,335
SPEEDOMETER (J101)
RO,1.0,150
C1060-4
1.2 WATT
C1060-7
B,1.0,80
A47
B,1.0,320
C1048-9 C1040-9
CIGAR LIGHTER ILLUMINATION (B112)
C0074-1
1.2 WATT
C0089-1
B,1.0,770
A35
A36
B,1.0,205
C1048-2 C1040-2
HEADER 0292 (K109)
C0292-13
C0292-11
B,2.0,430
C0550-3
HEADER 0289 (K109)
B,1.0,500
C0289-16
C0289-13
B,1.0,100
C0289-7
B,2.0,390
C0289-2
HEADER 0287 (K109)
B,1.0,880
C0287-3
B,2.0,770
C0287-4
HEADER-EARTH 0550 (K108)
C0550-9
C0550-1

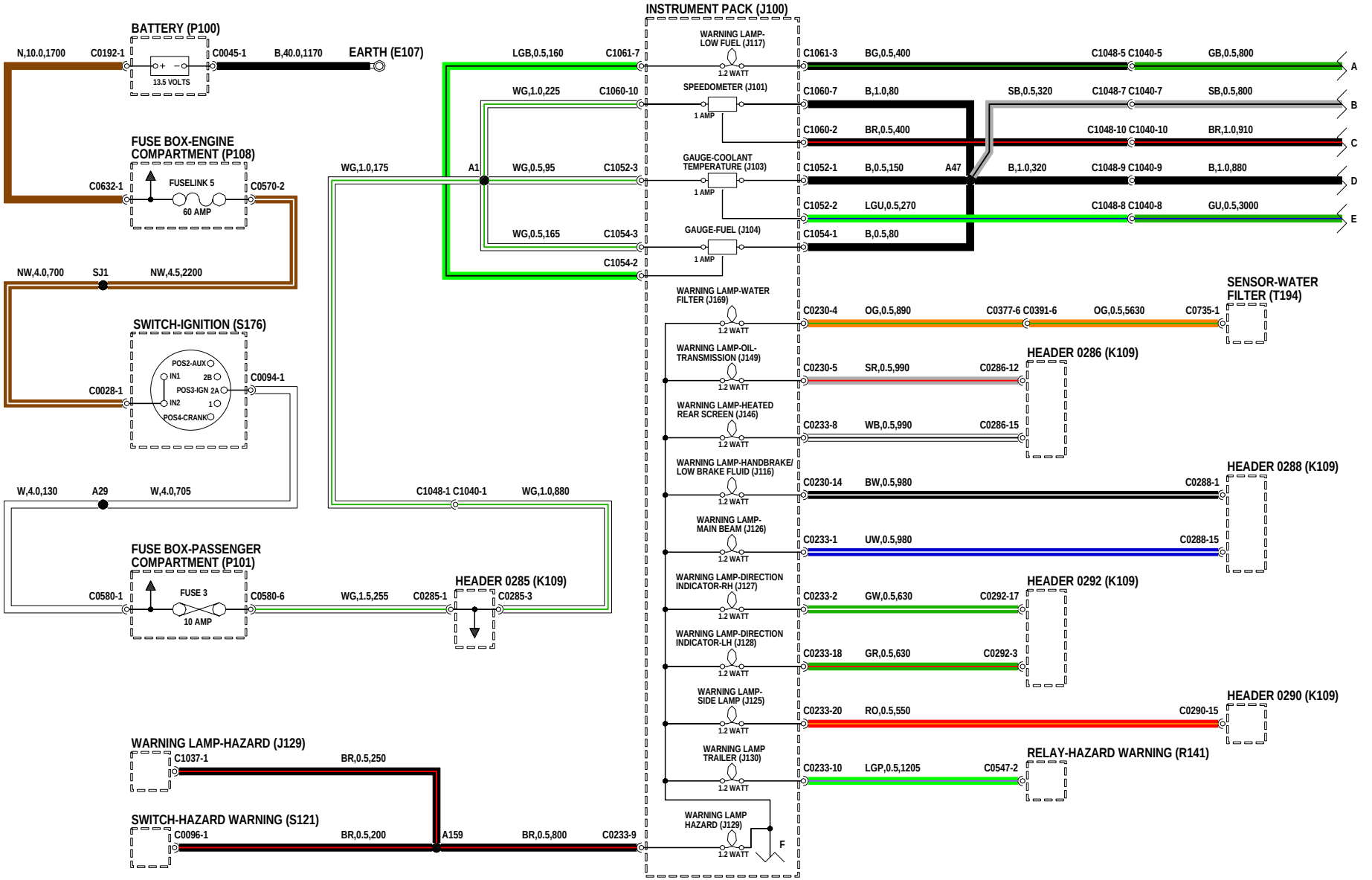
INSTRUMENT PACK (J100)
BATTERY (P100)
N,10.0,1700
C0192-1
13.5 VOLTS
C0045-1
B,40.0,1170
EARTH (E107)
FUSE BOX-ENGINE COMPARTMENT (P108)
C0632-1
FUSELINK 5
60 AMP
C0570-2
NW,4.0,700
SJ1
NW,4.5,2200
SWITCH-IGNITION (S176)
POS2-AUX
IN1
2B
POS3-IGN 2A
IN2
1
POS4-CRANK
C0028-1
C0094-1
W,4.0,130
A29
W,4.0,705
FUSE BOX-PASSENGER COMPARTMENT (P101)
C0580-1
FUSE 3
10 AMP
C0580-6
WG,1.5,255
C0285-1
HEADER 0285 (K109)
C0285-3
WG,1.0,175
A1
C1048-1 C1040-1
WG,1.0,880
LGB,0.5,160
C1061-7
WG,1.0,225
C1060-10
WG,0.5,95
C1052-3
WG,0.5,165
C1054-3
C1054-2
WARNING LAMP-LOW FUEL (J117)
1.2 WATT
SPEEDOMETER (J101)
1 AMP
GAUGE-COOLANT TEMPERATURE (J103)
1 AMP
GAUGE-FUEL (J104)
1 AMP
WARNING LAMP-WATER FILTER (J169)
WARNING LAMP-OIL-TRANSMISSION (J149)
WARNING LAMP-HEATED REAR SCREEN (J146)
WARNING LAMP-HANDBRAKE/ LOW BRAKE FLUID (J116)
WARNING LAMP-MAIN BEAM (J126)
WARNING LAMP-DIRECTION INDICATOR-RH (J127)
WARNING LAMP-DIRECTION INDICATOR-LH (J128)
WARNING LAMP-SIDE LAMP (J125)
WARNING LAMP TRAILER (J130)
WARNING LAMP HAZARD (J129)
F
C1061-3
BG,0.5,400
C1048-5 C1040-5
GB,0.5,800
A
C1060-7
B,1.0,80
SB,0.5,320
C1048-7 C1040-7
SB,0.5,800
B
C1060-2
BR,0.5,400
C1048-10 C1040-10
BR,1.0,910
C
C1052-1
B,0.5,150
A47
B,1.0,320
C1048-9 C1040-9
B,1.0,880
D
C1052-2
LGU,0.5,270
C1048-8 C1040-8
GU,0.5,3000
E
C1054-1
B,0.5,80
SENSOR-WATER FILTER (T194)
C0230-4
OG,0.5,890
C0377-6 C0391-6
OG,0.5,5630
C0735-1
HEADER 0286 (K109)
C0230-5
SR,0.5,990
C0286-12
C0233-8
WB,0.5,990
C0286-15
HEADER 0288 (K109)
C0230-14
BW,0.5,980
C0288-1
C0233-1
UW,0.5,980
C0288-15
HEADER 0292 (K109)
C0233-2
GW,0.5,630
C0292-17
C0233-18
GR,0.5,630
C0292-3
HEADER 0290 (K109)
C0233-20
RO,0.5,550
C0290-15
RELAY-HAZARD WARNING (R141)
C0233-10
LGP,0.5,1205
C0547-2
WARNING LAMP-HAZARD (J129)
C1037-1
BR,0.5,250
SWITCH-HAZARD WARNING (S121)
C0096-1
BR,0.5,200
A159
BR,0.5,800
C0233-9

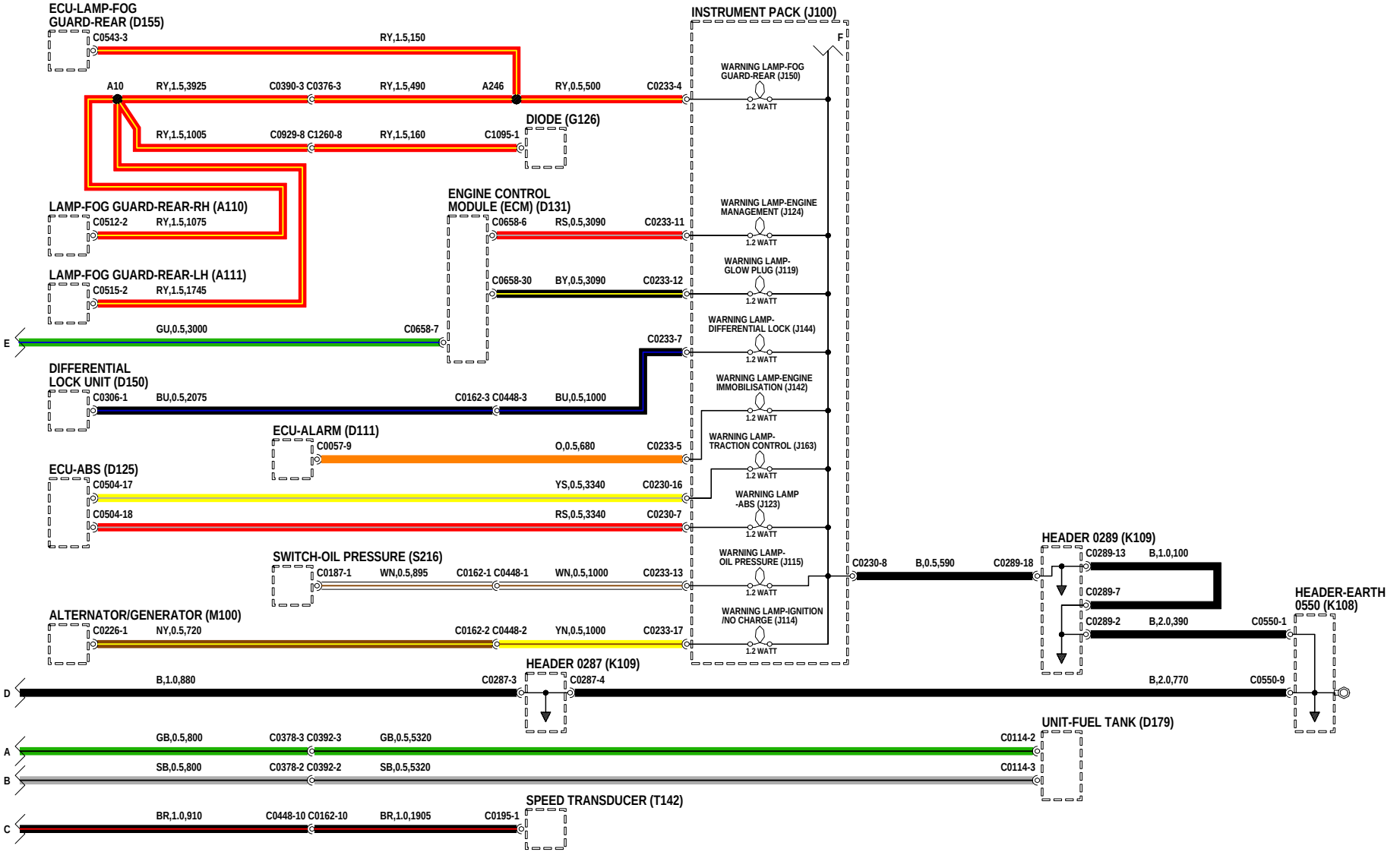
ECU-LAMP-FOG GUARD-REAR (D155)
C0543-3
RY,1.5,150
A10
RY,1.5,3925
C0390-3 C0376-3
RY,1.5,490
A246
RY,0.5,500
C0233-4
INSTRUMENT PACK (J100)
F
WARNING LAMP-FOG GUARD-REAR (J150)
1.2 WATT
DIODE (G126)
RY,1.5,1005
C0929-8 C1260-8
RY,1.5,160
C1095-1
LAMP-FOG GUARD-REAR-RH (A110)
C0512-2
RY,1.5,1075
ENGINE CONTROL MODULE (ECM) (D131)
C0658-6
RS,0.5,3090
C0233-11
WARNING LAMP-ENGINE MANAGEMENT (J124)
LAMP-FOG GUARD-REAR-LH (A111)
C0515-2
RY,1.5,1745
C0658-30
BY,0.5,3090
C0233-12
WARNING LAMP-GLOW PLUG (J119)
E
GU,0.5,3000
C0658-7
C0233-7
WARNING LAMP-DIFFERENTIAL LOCK (J144)
DIFFERENTIAL LOCK UNIT (D150)
C0306-1
BU,0.5,2075
C0162-3 C0448-3
BU,0.5,1000
WARNING LAMP-ENGINE IMMOBILISATION (J142)
ECU-ALARM (D111)
C0057-9
O,0.5,680
C0233-5
WARNING LAMP-TRACTION CONTROL (J163)
ECU-ABS (D125)
C0504-17
YS,0.5,3340
C0230-16
WARNING LAMP -ABS (J123)
C0504-18
RS,0.5,3340
C0230-7
SWITCH-OIL PRESSURE (S216)
C0187-1
WN,0.5,895
C0162-1 C0448-1
WN,0.5,1000
C0233-13
WARNING LAMP-OIL PRESSURE (J115)
C0230-8
B,0.5,590
C0289-18
HEADER 0289 (K109)
C0289-13
B,1.0,100
C0289-7
HEADER-EARTH 0550 (K108)
ALTERNATOR/GENERATOR (M100)
C0226-1
NY,0.5,720
C0162-2 C0448-2
YN,0.5,1000
C0233-17
WARNING LAMP-IGNITION /NO CHARGE (J114)
C0289-2
B,2.0,390
C0550-1
HEADER 0287 (K109)
D
B,1.0,880
C0287-3
C0287-4
B,2.0,770
C0550-9
UNIT-FUEL TANK (D179)
A
GB,0.5,800
C0378-3 C0392-3
GB,0.5,5320
C0114-2
B
SB,0.5,800
C0378-2 C0392-2
SB,0.5,5320
C0114-3
SPEED TRANSDUCER (T142)
C
BR,1.0,910
C0448-10 C0162-10
BR,1.0,1905
C0195-1

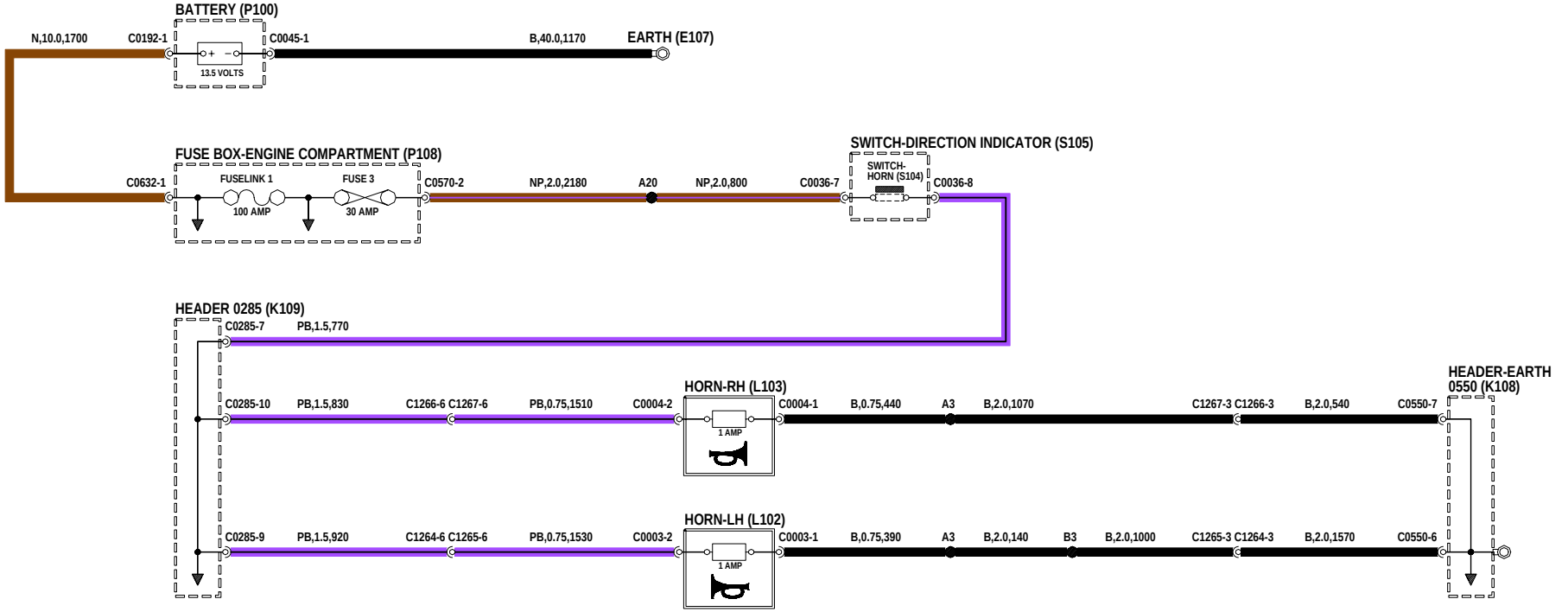
BATTERY (P100)
N,10.0,1700
C0192-1
C0045-1
13.5 VOLTS
B,40.0,1170
EARTH (E107)
FUSE BOX-ENGINE COMPARTMENT (P108)
C0632-1
FUSELINK 1
100 AMP
FUSE 3
30 AMP
C0570-2
NP,2.0,2180
A20
NP,2.0,800
C0036-7
SWITCH-DIRECTION INDICATOR (S105)
SWITCH-HORN (S104)
C0036-8
HEADER 0285 (K109)
C0285-7
PB,1.5,770
C0285-10
PB,1.5,830
C1266-6 C1267-6
PB,0.75,1510
C0004-2
HORN-RH (L103)
1 AMP
C0004-1
B,0.75,440
A3
B,2.0,1070
C1267-3 C1266-3
B,2.0,540
C0550-7
HEADER-EARTH 0550 (K108)
C0285-9
PB,1.5,920
C1264-6 C1265-6
PB,0.75,1530
C0003-2
HORN-LH (L102)
1 AMP
C0003-1
B,0.75,390
A3
B,2.0,140
B3
B,2.0,1000
C1265-3 C1264-3
B,2.0,1570
C0550-6

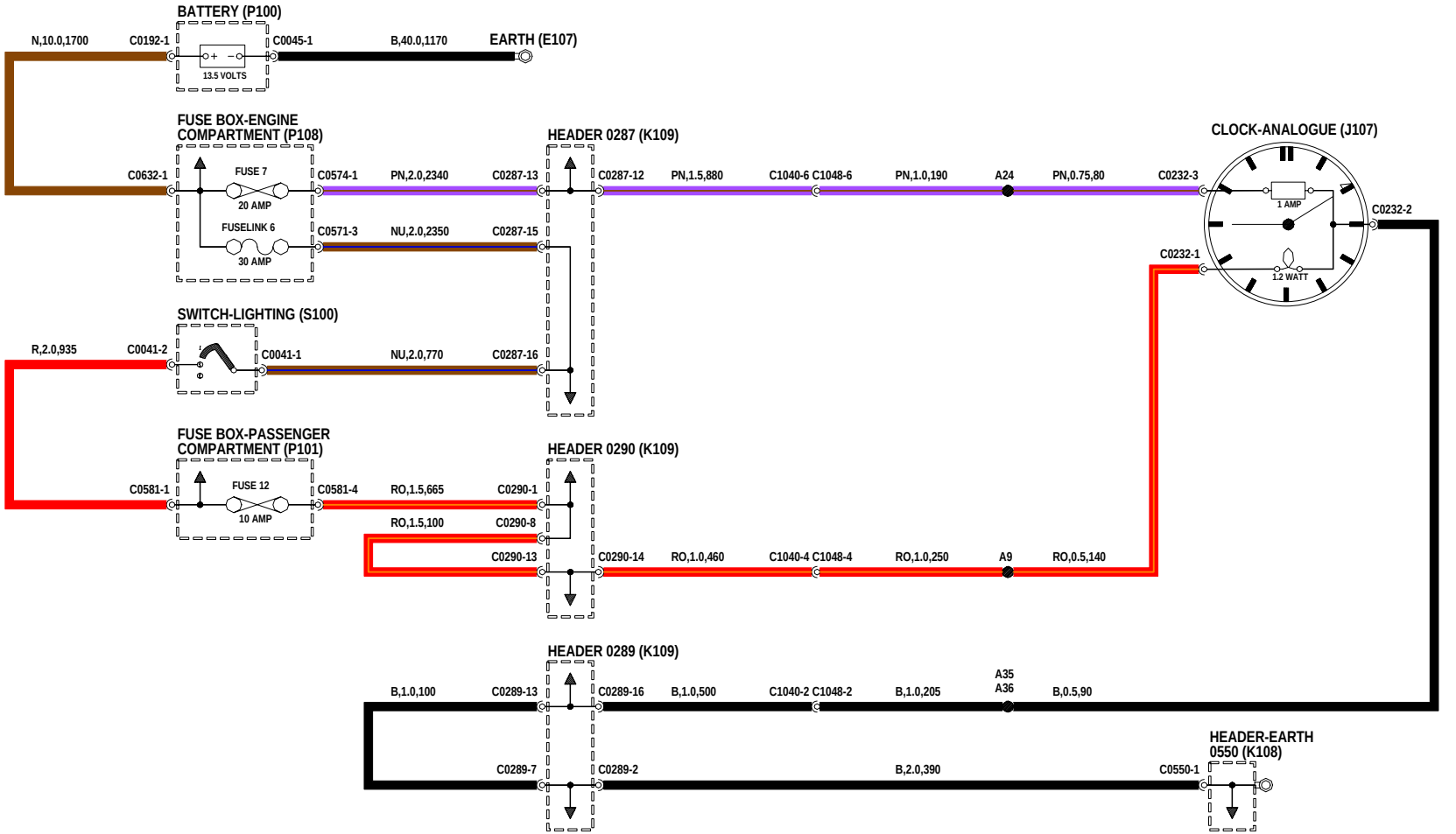
BATTERY (P100)
N,10.0,1700
C0192-1
13.5 VOLTS
C0045-1
B,40.0,1170
EARTH (E107)
FUSE BOX-ENGINE COMPARTMENT (P108)
C0632-1
FUSE 7
20 AMP
FUSELINK 6
30 AMP
C0574-1
PN,2.0,2340
C0287-13
C0571-3
NU,2.0,2350
C0287-15
HEADER 0287 (K109)
C0287-12
PN,1.5,880
C1040-6 C1048-6
PN,1.0,190
A24
PN,0.75,80
C0232-3
CLOCK-ANALOGUE (J107)
1 AMP
1.2 WATT
C0232-2
C0232-1
SWITCH-LIGHTING (S100)
R,2.0,935
C0041-2
C0041-1
NU,2.0,770
C0287-16
FUSE BOX-PASSENGER COMPARTMENT (P101)
C0581-1
FUSE 12
10 AMP
C0581-4
RO,1.5,665
C0290-1
RO,1.5,100
C0290-8
C0290-13
HEADER 0290 (K109)
C0290-14
RO,1.0,460
C1040-4 C1048-4
RO,1.0,250
A9
RO,0.5,140
HEADER 0289 (K109)
B,1.0,100
C0289-13
C0289-16
B,1.0,500
C1040-2 C1048-2
B,1.0,205
A35
A36
B,0.5,90
C0289-7
C0289-2
B,2.0,390
C0550-1
HEADER-EARTH 0550 (K108)

CIGAR LIGHTER

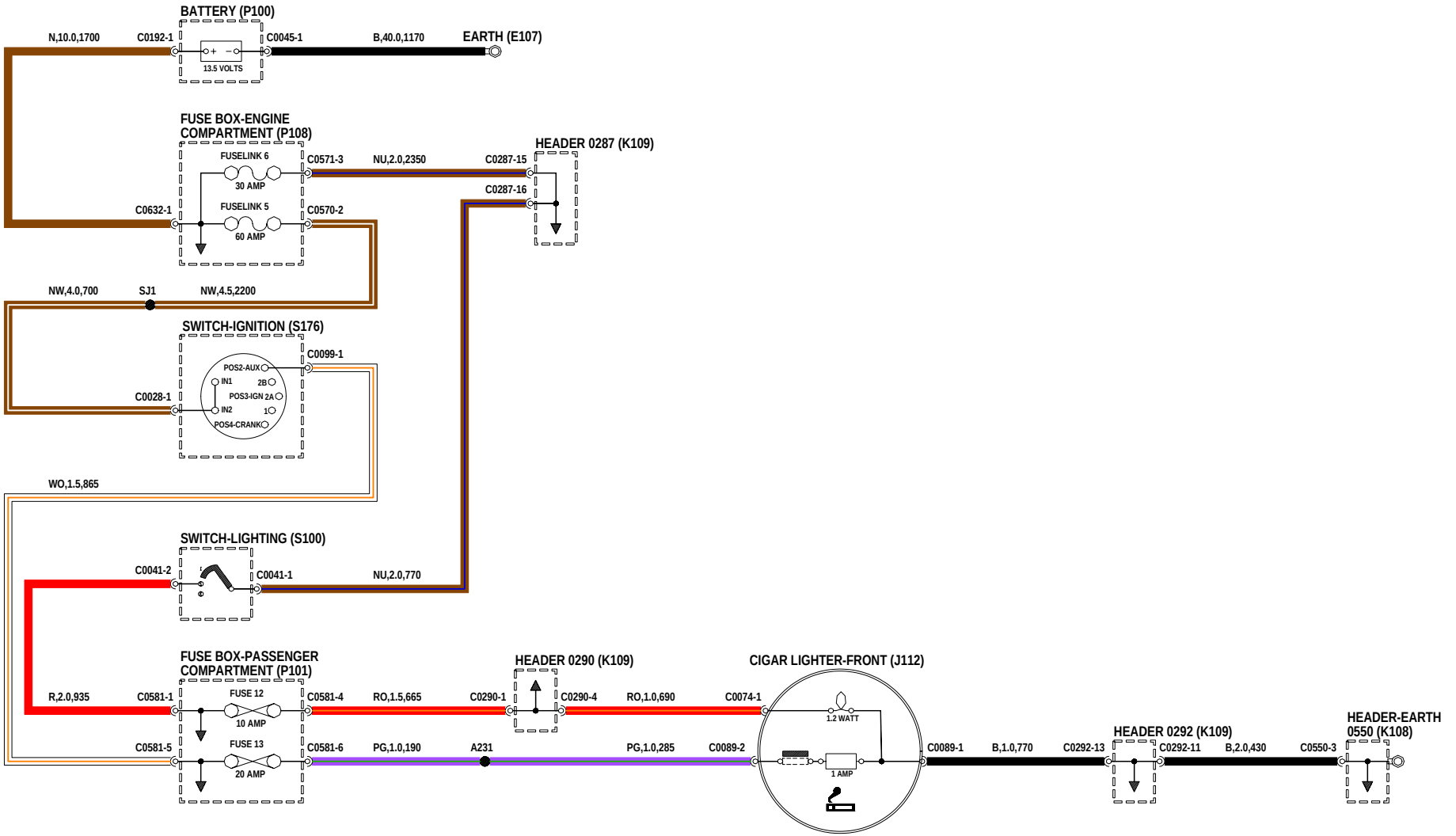

ACCESSORY SOCKET

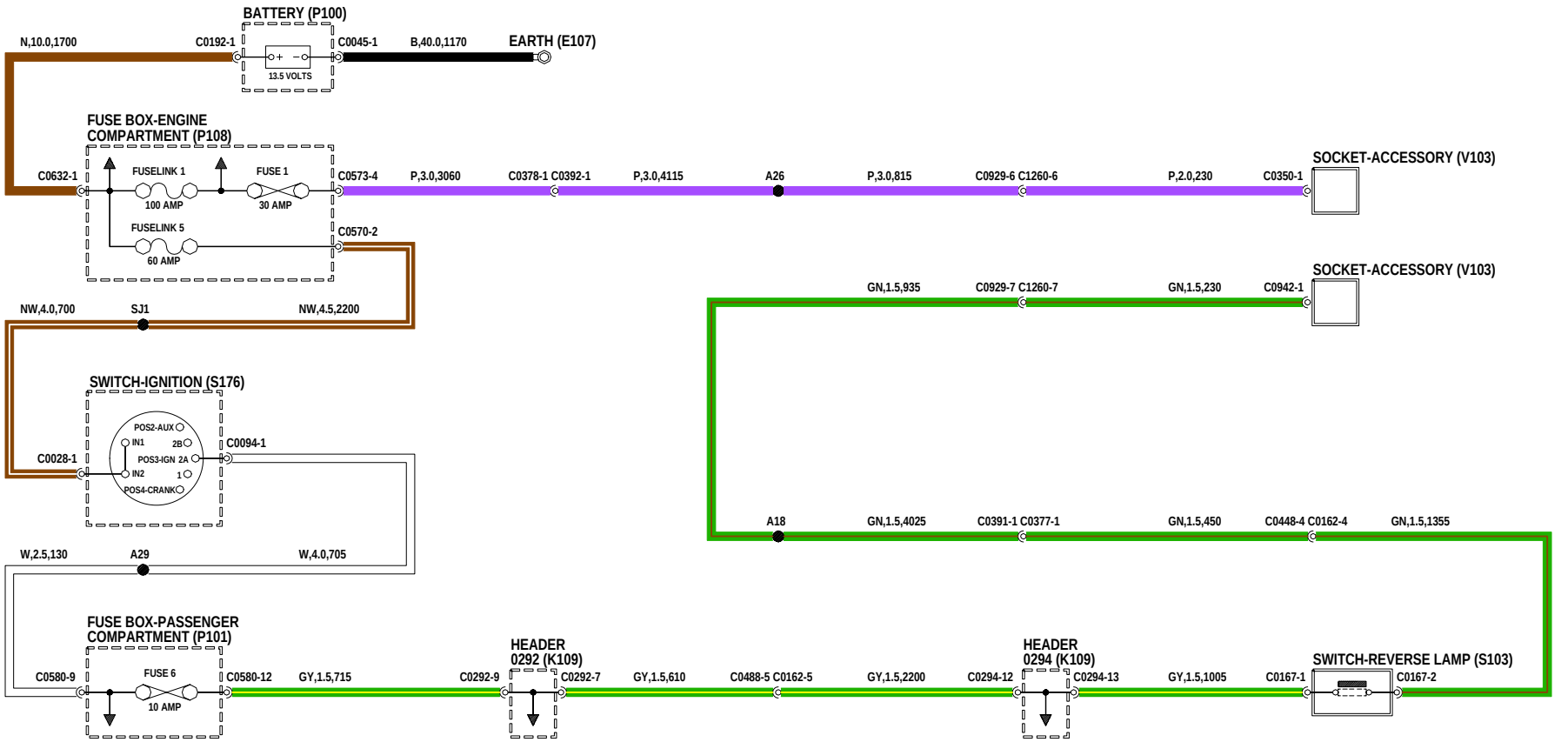

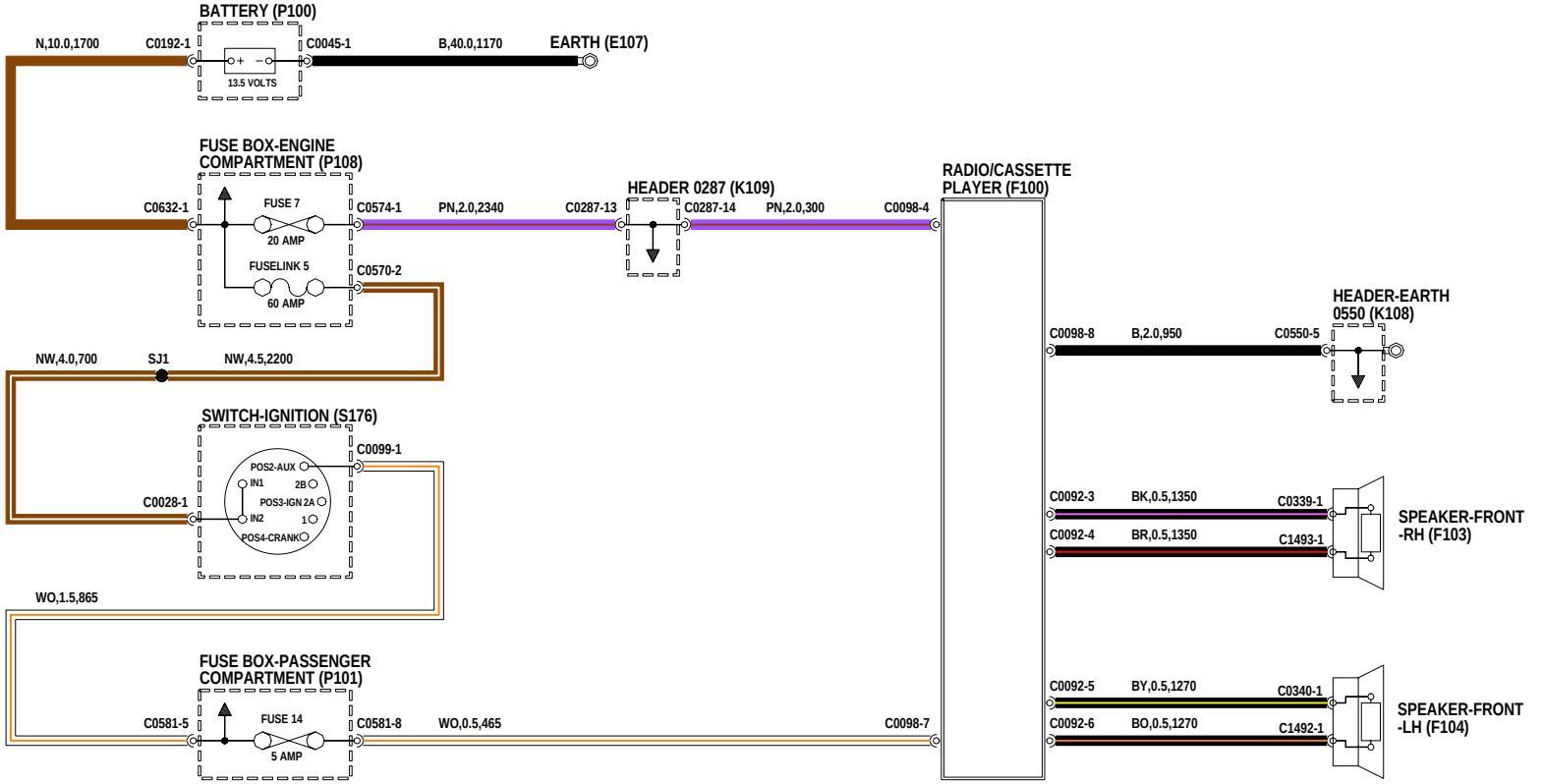
BATTERY (P100)
N,10.0,1700
C0192-1
C0045-1
B,40.0,1170
EARTH (E107)
13.5 VOLTS
FUSE BOX-ENGINE COMPARTMENT (P108)
C0632-1
FUSE 7
20 AMP
FUSELINK 5
60 AMP
C0570-2
C0574-1
PN,2.0,2340
C0287-13
HEADER 0287 (K109)
C0287-14
PN,2.0,300
C0098-4
RADIO/CASSETTE PLAYER (F100)
C0098-8
B,2.0,950
C0550-5
HEADER-EARTH 0550 (K108)
NW,4.0,700
SJ1
NW,4.5,2200
SWITCH-IGNITION (S176)
C0099-1
POS2-AUX
IN1
2B
POS3-IGN
2A
C0028-1
IN2
1
POS4-CRANK
C0092-3
BK,0.5,1350
C0339-1
C0092-4
BR,0.5,1350
C1493-1
SPEAKER-FRONT -RH (F103)
WO,1.5,865
FUSE BOX-PASSENGER COMPARTMENT (P101)
C0581-5
FUSE 14
5 AMP
C0581-8
WO,0.5,465
C0098-7
C0092-5
BY,0.5,1270
C0340-1
C0092-6
BO,0.5,1270
C1492-1
SPEAKER-FRONT -LH (F104)

HEADER JOINTS

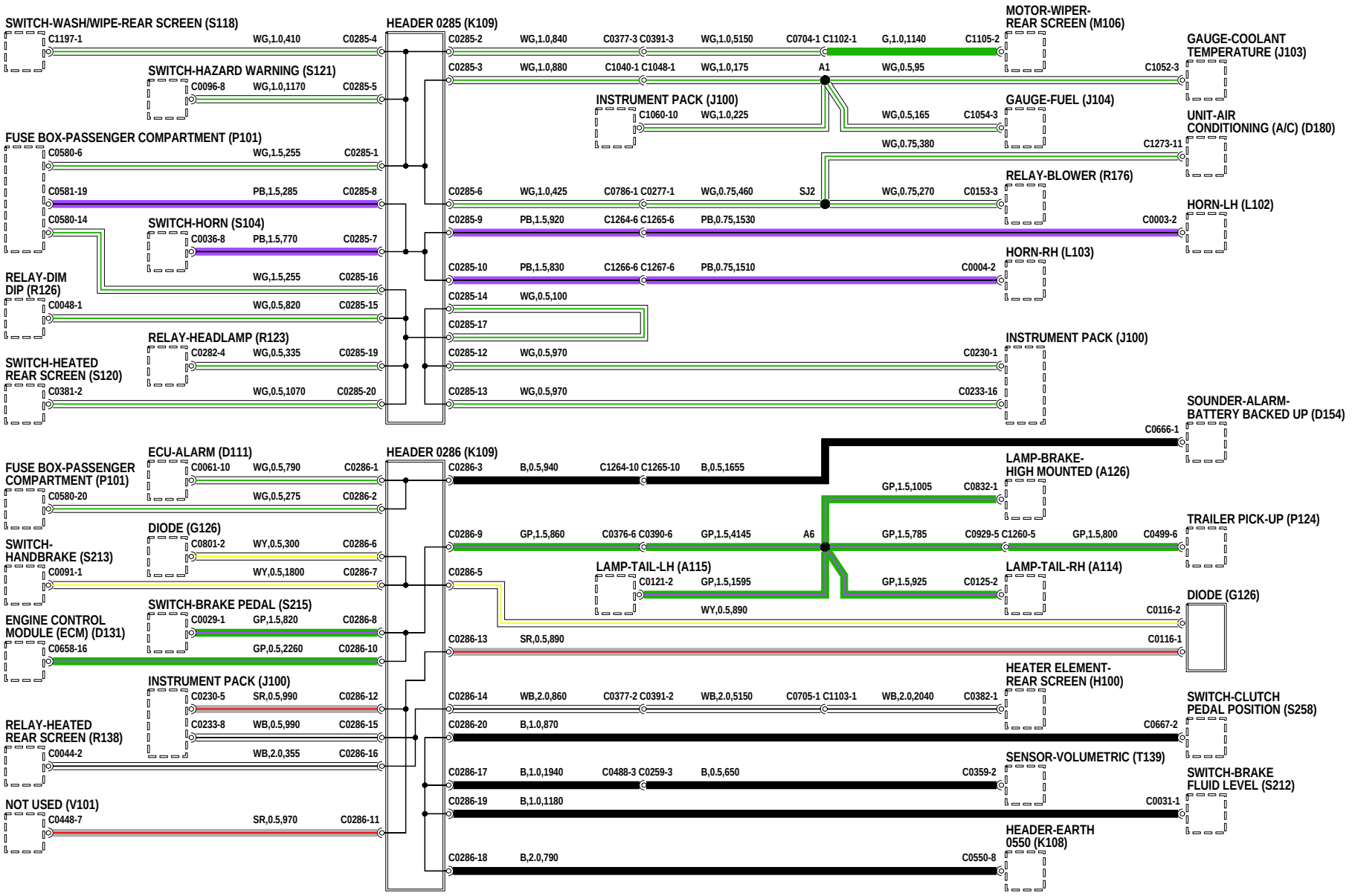

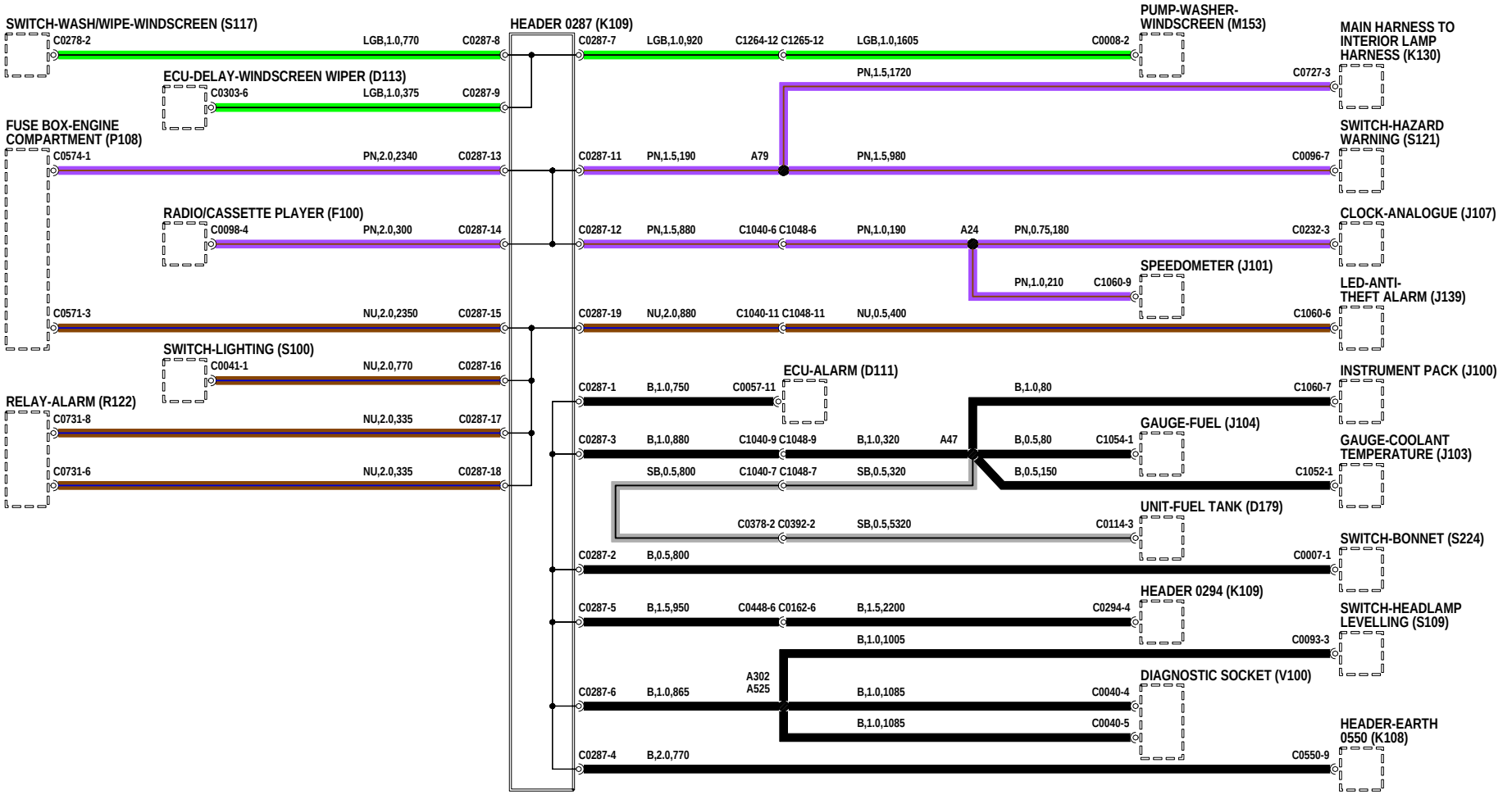
SWITCH-WASH/WIPE-WINDSCREEN (S117)
C0278-2
LGB,1.0,770
C0287-8
ECU-DELAY-WINDSCREEN WIPER (D113)
C0303-6
LGB,1.0,375
C0287-9
FUSE BOX-ENGINE COMPARTMENT (P108)
C0574-1
PN,2.0,2340
C0287-13
RADIO/CASSETTE PLAYER (F100)
C0098-4
PN,2.0,300
C0287-14
C0571-3
NU,2.0,2350
C0287-15
SWITCH-LIGHTING (S100)
C0041-1
NU,2.0,770
C0287-16
RELAY-ALARM (R122)
C0731-8
NU,2.0,335
C0287-17
C0731-6
NU,2.0,335
C0287-18
HEADER 0287 (K109)
C0287-7
LGB,1.0,920
C1264-12 C1265-12
LGB,1.0,1605
C0008-2
PUMP-WASHER-WINDSCREEN (M153)
PN,1.5,1720
C0727-3
MAIN HARNESS TO INTERIOR LAMP HARNESS (K130)
C0287-11
PN,1.5,190
A79
PN,1.5,980
C0096-7
SWITCH-HAZARD WARNING (S121)
C0287-12
PN,1.5,880
C1040-6 C1048-6
PN,1.0,190
A24
PN,0.75,180
C0232-3
CLOCK-ANALOGUE (J107)
PN,1.0,210
C1060-9
SPEEDOMETER (J101)
C0287-19
NU,2.0,880
C1040-11 C1048-11
NU,0.5,400
C1060-6
LED-ANTI-THEFT ALARM (J139)
C0287-1
B,1.0,750
C0057-11
ECU-ALARM (D111)
B,1.0,80
C1060-7
INSTRUMENT PACK (J100)
C0287-3
B,1.0,880
C1040-9 C1048-9
B,1.0,320
A47
B,0.5,80
C1054-1
GAUGE-FUEL (J104)
SB,0.5,800
C1040-7 C1048-7
SB,0.5,320
B,0.5,150
C1052-1
GAUGE-COOLANT TEMPERATURE (J103)
C0378-2 C0392-2
SB,0.5,5320
C0114-3
UNIT-FUEL TANK (D179)
C0287-2
B,0.5,800
C0007-1
SWITCH-BONNET (S224)
C0287-5
B,1.5,950
C0448-6 C0162-6
B,1.5,2200
C0294-4
HEADER 0294 (K109)
B,1.0,1005
C0093-3
SWITCH-HEADLAMP LEVELLING (S109)
A302
A525
C0287-6
B,1.0,865
B,1.0,1085
C0040-4
B,1.0,1085
C0040-5
DIAGNOSTIC SOCKET (V100)
C0287-4
B,2.0,770
C0550-9
HEADER-EARTH 0550 (K108)

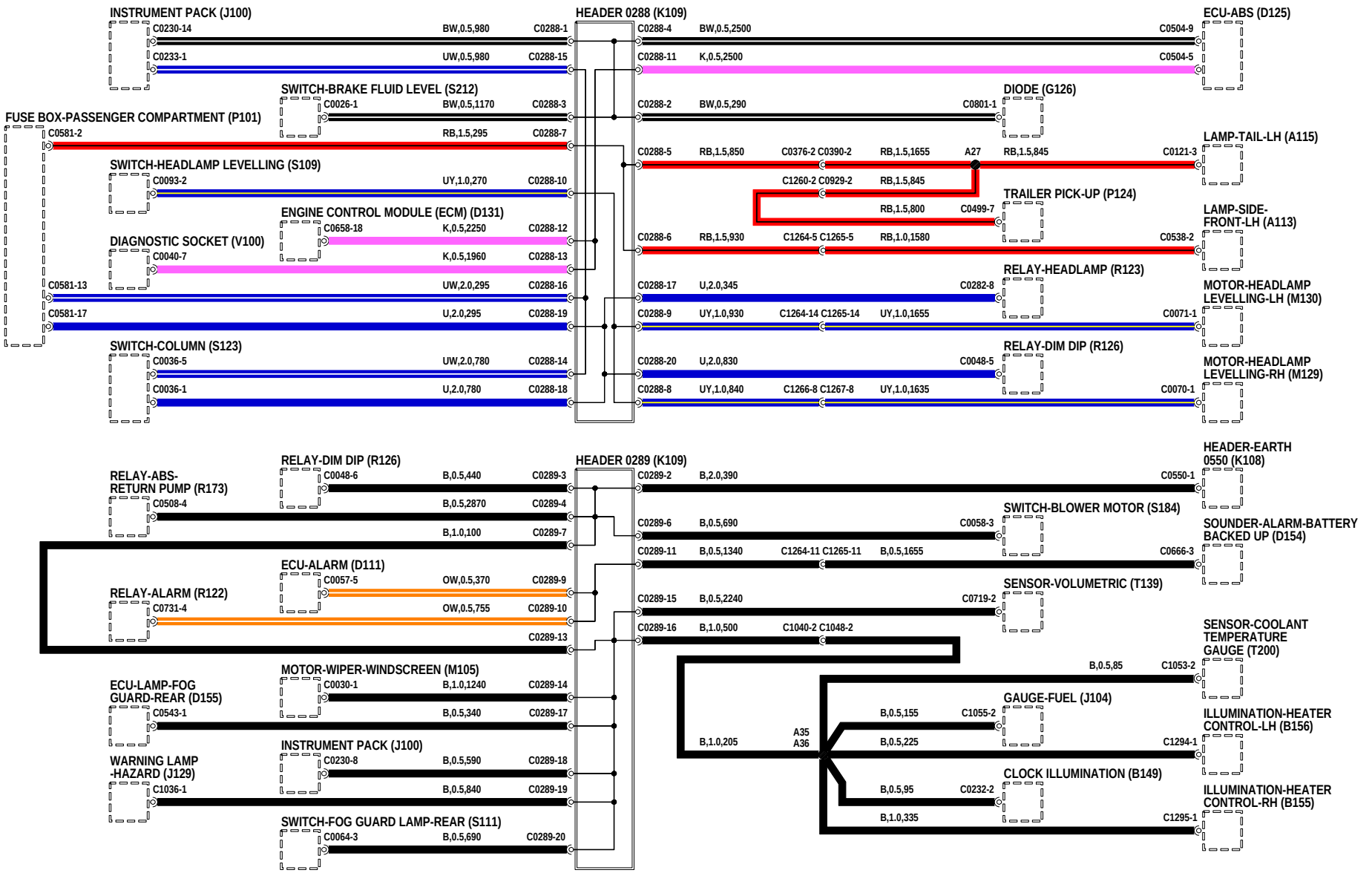
INSTRUMENT PACK (J100)
C0230-14
BW,0.5,980
C0288-1
C0233-1
UW,0.5,980
C0288-15
SWITCH-BRAKE FLUID LEVEL (S212)
C0026-1
BW,0.5,1170
C0288-3
FUSE BOX-PASSENGER COMPARTMENT (P101)
C0581-2
RB,1.5,295
C0288-7
SWITCH-HEADLAMP LEVELLING (S109)
C0093-2
UY,1.0,270
C0288-10
ENGINE CONTROL MODULE (ECM) (D131)
C0658-18
K,0.5,2250
C0288-12
DIAGNOSTIC SOCKET (V100)
C0040-7
K,0.5,1960
C0288-13
C0581-13
UW,2.0,295
C0288-16
C0581-17
U,2.0,295
C0288-19
SWITCH-COLUMN (S123)
C0036-5
UW,2.0,780
C0288-14
C0036-1
U,2.0,780
C0288-18
HEADER 0288 (K109)
C0288-4
BW,0.5,2500
C0504-9
ECU-ABS (D125)
C0288-11
K,0.5,2500
C0504-5
DIODE (G126)
C0288-2
BW,0.5,290
C0801-1
C0288-5
RB,1.5,850
C0376-2 C0390-2
RB,1.5,1655
A27
RB,1.5,845
C0121-3
LAMP-TAIL-LH (A115)
C1260-2 C0929-2
RB,1.5,845
TRAILER PICK-UP (P124)
RB,1.5,800
C0499-7
LAMP-SIDE-FRONT-LH (A113)
C0288-6
RB,1.5,930
C1264-5 C1265-5
RB,1.0,1580
C0538-2
RELAY-HEADLAMP (R123)
C0288-17
U,2.0,345
C0282-8
MOTOR-HEADLAMP LEVELLING-LH (M130)
C0288-9
UY,1.0,930
C1264-14 C1265-14
UY,1.0,1655
C0071-1
RELAY-DIM DIP (R126)
C0288-20
U,2.0,830
C0048-5
MOTOR-HEADLAMP LEVELLING-RH (M129)
C0288-8
UY,1.0,840
C1266-8 C1267-8
UY,1.0,1635
C0070-1
RELAY-DIM DIP (R126)
C0048-6
B,0.5,440
C0289-3
RELAY-ABS-RETURN PUMP (R173)
C0508-4
B,0.5,2870
C0289-4
B,1.0,100
C0289-7
ECU-ALARM (D111)
C0057-5
OW,0.5,370
C0289-9
RELAY-ALARM (R122)
C0731-4
OW,0.5,755
C0289-10
C0289-13
MOTOR-WIPER-WINDSCREEN (M105)
C0030-1
B,1.0,1240
C0289-14
ECU-LAMP-FOG GUARD-REAR (D155)
C0543-1
B,0.5,340
C0289-17
INSTRUMENT PACK (J100)
C0230-8
B,0.5,590
C0289-18
WARNING LAMP -HAZARD (J129)
C1036-1
B,0.5,840
C0289-19
SWITCH-FOG GUARD LAMP-REAR (S111)
C0064-3
B,0.5,690
C0289-20
HEADER 0289 (K109)
C0289-2
B,2.0,390
C0550-1
HEADER-EARTH 0550 (K108)
C0289-6
B,0.5,690
C0058-3
SWITCH-BLOWER MOTOR (S184)
C0289-11
B,0.5,1340
C1264-11 C1265-11
B,0.5,1655
C0666-3
SOUNDER-ALARM-BATTERY BACKED UP (D154)
C0289-15
B,0.5,2240
C0719-2
SENSOR-VOLUMETRIC (T139)
C0289-16
B,1.0,500
C1040-2 C1048-2
SENSOR-COOLANT TEMPERATURE GAUGE (T200)
B,0.5,85
C1053-2
B,0.5,155
C1055-2
GAUGE-FUEL (J104)
B,1.0,205
A35
A36
B,0.5,225
C1294-1
ILLUMINATION-HEATER CONTROL-LH (B156)
B,0.5,95
C0232-2
CLOCK ILLUMINATION (B149)
B,1.0,335
C1295-1
ILLUMINATION-HEATER CONTROL-RH (B155)

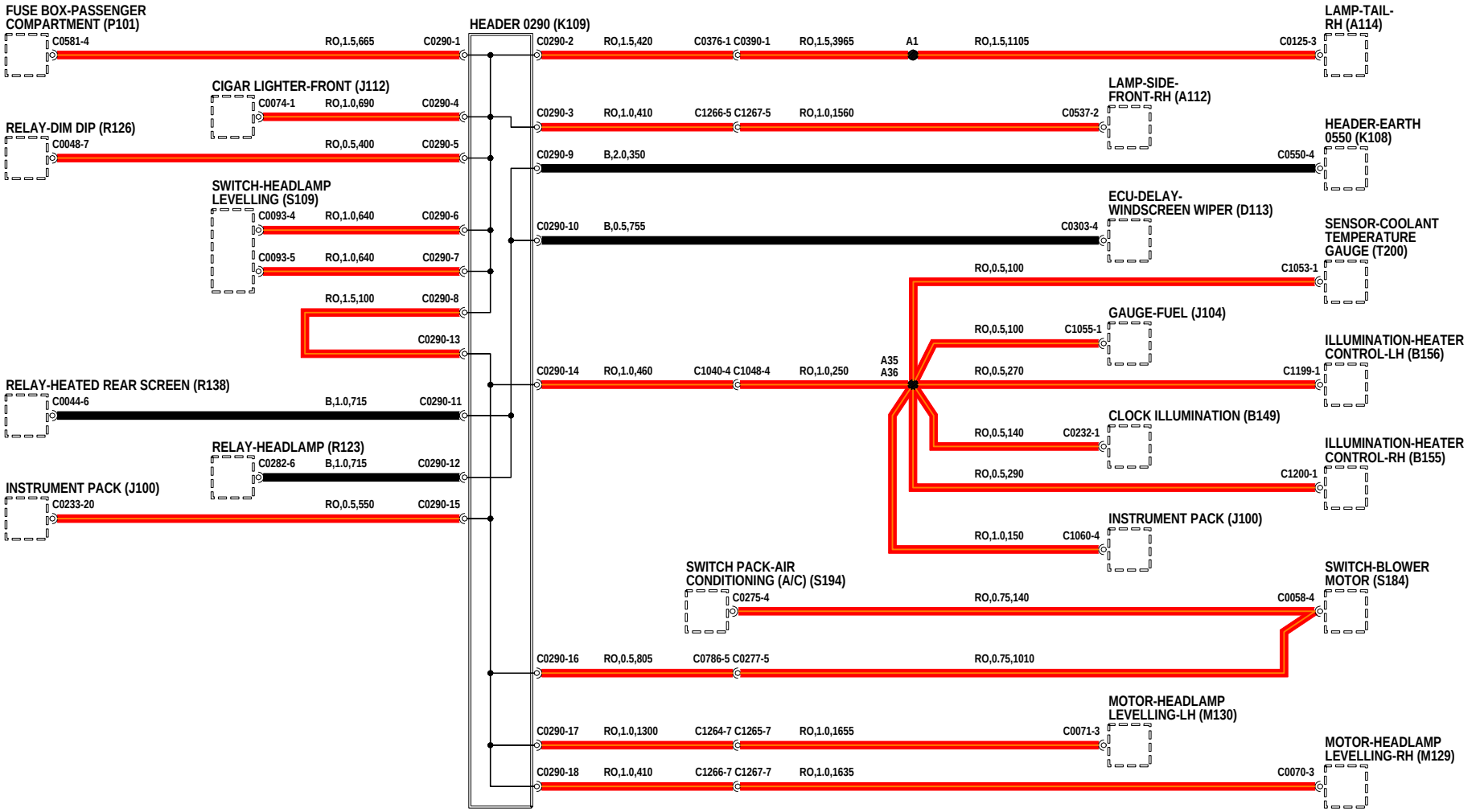
FUSE BOX-PASSENGER COMPARTMENT (P101)
C0581-4
RO,1.5,665
C0290-1
HEADER 0290 (K109)
C0290-2
RO,1.5,420
C0376-1 C0390-1
RO,1.5,3965
A1
RO,1.5,1105
C0125-3
LAMP-TAIL-RH (A114)
CIGAR LIGHTER-FRONT (J112)
C0074-1
RO,1.0,690
C0290-4
C0290-3
RO,1.0,410
C1266-5 C1267-5
RO,1.0,1560
C0537-2
LAMP-SIDE-FRONT-RH (A112)
RELAY-DIM DIP (R126)
C0048-7
RO,0.5,400
C0290-5
C0290-9
B,2.0,350
C0550-4
HEADER-EARTH 0550 (K108)
SWITCH-HEADLAMP LEVELLING (S109)
C0093-4
RO,1.0,640
C0290-6
C0290-10
B,0.5,755
C0303-4
ECU-DELAY-WINDSCREEN WIPER (D113)
C0093-5
RO,1.0,640
C0290-7
RO,0.5,100
C1053-1
SENSOR-COOLANT TEMPERATURE GAUGE (T200)
RO,1.5,100
C0290-8
C0290-13
RO,0.5,100
C1055-1
GAUGE-FUEL (J104)
C0290-14
RO,1.0,460
C1040-4 C1048-4
RO,1.0,250
A35
A36
RO,0.5,270
C1199-1
ILLUMINATION-HEATER CONTROL-LH (B156)
RELAY-HEATED REAR SCREEN (R138)
C0044-6
B,1.0,715
C0290-11
RO,0.5,140
C0232-1
CLOCK ILLUMINATION (B149)
RELAY-HEADLAMP (R123)
C0282-6
B,1.0,715
C0290-12
RO,0.5,290
C1200-1
ILLUMINATION-HEATER CONTROL-RH (B155)
INSTRUMENT PACK (J100)
C0233-20
RO,0.5,550
C0290-15
RO,1.0,150
C1060-4
INSTRUMENT PACK (J100)
SWITCH PACK-AIR CONDITIONING (A/C) (S194)
C0275-4
RO,0.75,140
C0058-4
SWITCH-BLOWER MOTOR (S184)
C0290-16
RO,0.5,805
C0786-5 C0277-5
RO,0.75,1010
MOTOR-HEADLAMP LEVELLING-LH (M130)
C0290-17
RO,1.0,1300
C1264-7 C1265-7
RO,1.0,1655
C0071-3
MOTOR-HEADLAMP LEVELLING-RH (M129)
C0290-18
RO,1.0,410
C1266-7 C1267-7
RO,1.0,1635
C0070-3

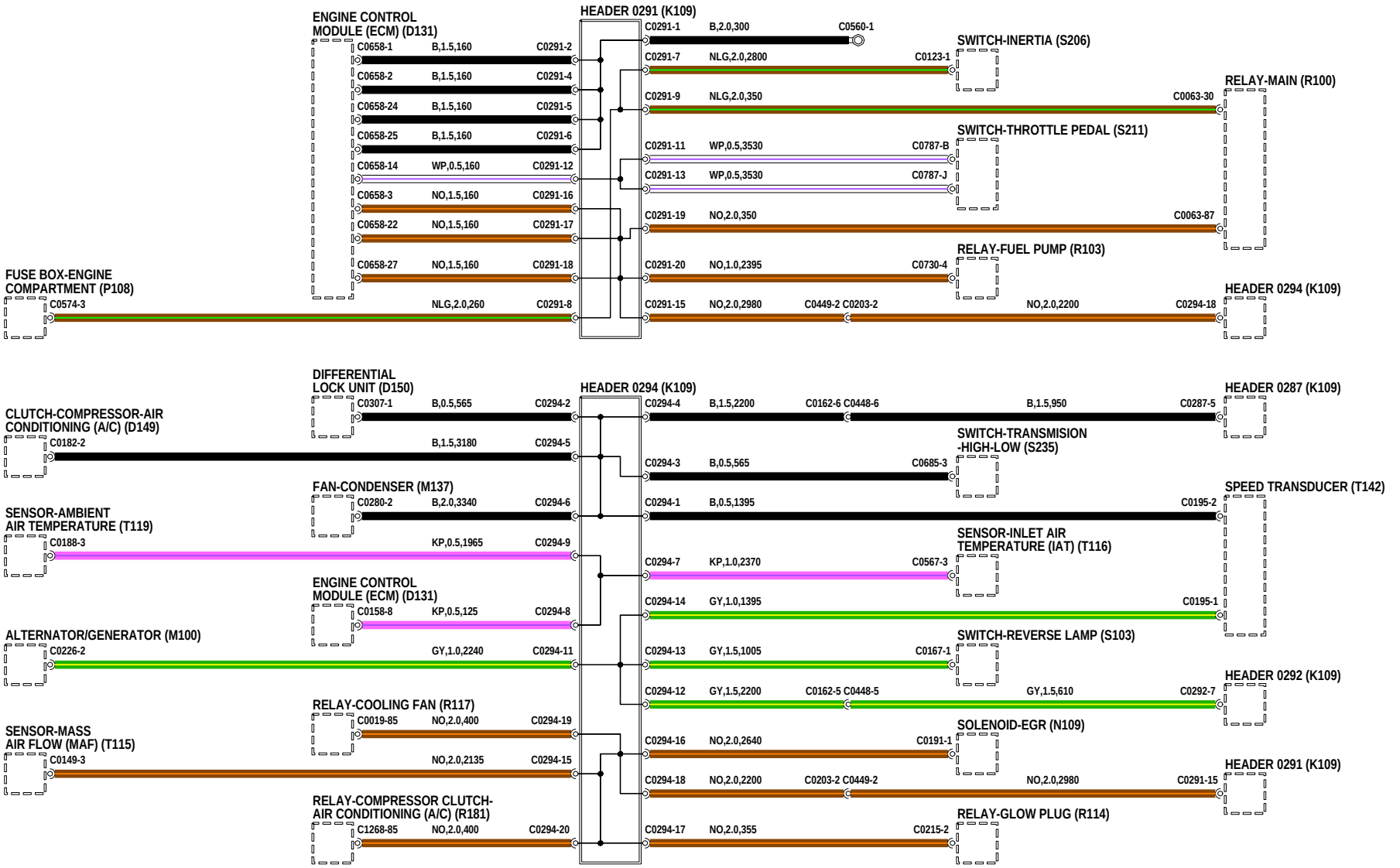
HEADER 0291 (K109)
ENGINE CONTROL MODULE (ECM) (D131)
C0658-1 B,1.5,160 C0291-2
C0658-2 B,1.5,160 C0291-4
C0658-24 B,1.5,160 C0291-5
C0658-25 B,1.5,160 C0291-6
C0658-14 WP,0.5,160 C0291-12
C0658-3 NO,1.5,160 C0291-16
C0658-22 NO,1.5,160 C0291-17
C0658-27 NO,1.5,160 C0291-18
FUSE BOX-ENGINE COMPARTMENT (P108)
C0574-3 NLG,2.0,260 C0291-8
C0291-1 B,2.0,300 C0560-1
SWITCH-INERTIA (S206)
C0291-7 NLG,2.0,2800 C0123-1
RELAY-MAIN (R100)
C0291-9 NLG,2.0,350 C0063-30
SWITCH-THROTTLE PEDAL (S211)
C0291-11 WP,0.5,3530 C0787-B
C0291-13 WP,0.5,3530 C0787-J
C0291-19 NO,2.0,350 C0063-87
RELAY-FUEL PUMP (R103)
C0291-20 NO,1.0,2395 C0730-4
HEADER 0294 (K109)
C0291-15 NO,2.0,2980 C0449-2 C0203-2 NO,2.0,2200 C0294-18
DIFFERENTIAL LOCK UNIT (D150)
C0307-1 B,0.5,565 C0294-2
CLUTCH-COMPRESSOR-AIR CONDITIONING (A/C) (D149)
C0182-2 B,1.5,3180 C0294-5
FAN-CONDENSER (M137)
C0280-2 B,2.0,3340 C0294-6
SENSOR-AMBIENT AIR TEMPERATURE (T119)
C0188-3 KP,0.5,1965 C0294-9
ENGINE CONTROL MODULE (ECM) (D131)
C0158-8 KP,0.5,125 C0294-8
ALTERNATOR/GENERATOR (M100)
C0226-2 GY,1.0,2240 C0294-11
RELAY-COOLING FAN (R117)
C0019-85 NO,2.0,400 C0294-19
SENSOR-MASS AIR FLOW (MAF) (T115)
C0149-3 NO,2.0,2135 C0294-15
RELAY-COMPRESSOR CLUTCH-AIR CONDITIONING (A/C) (R181)
C1268-85 NO,2.0,400 C0294-20
HEADER 0294 (K109)
C0294-4 B,1.5,2200 C0162-6 C0448-6 B,1.5,950 C0287-5
HEADER 0287 (K109)
SWITCH-TRANSMISION -HIGH-LOW (S235)
C0294-3 B,0.5,565 C0685-3
SPEED TRANSDUCER (T142)
C0294-1 B,0.5,1395 C0195-2
SENSOR-INLET AIR TEMPERATURE (IAT) (T116)
C0294-7 KP,1.0,2370 C0567-3
C0294-14 GY,1.0,1395 C0195-1
SWITCH-REVERSE LAMP (S103)
C0294-13 GY,1.5,1005 C0167-1
HEADER 0292 (K109)
C0294-12 GY,1.5,2200 C0162-5 C0448-5 GY,1.5,610 C0292-7
SOLENOID-EGR (N109)
C0294-16 NO,2.0,2640 C0191-1
HEADER 0291 (K109)
C0294-18 NO,2.0,2200 C0203-2 C0449-2 NO,2.0,2980 C0291-15
RELAY-GLOW PLUG (R114)
C0294-17 NO,2.0,355 C0215-2

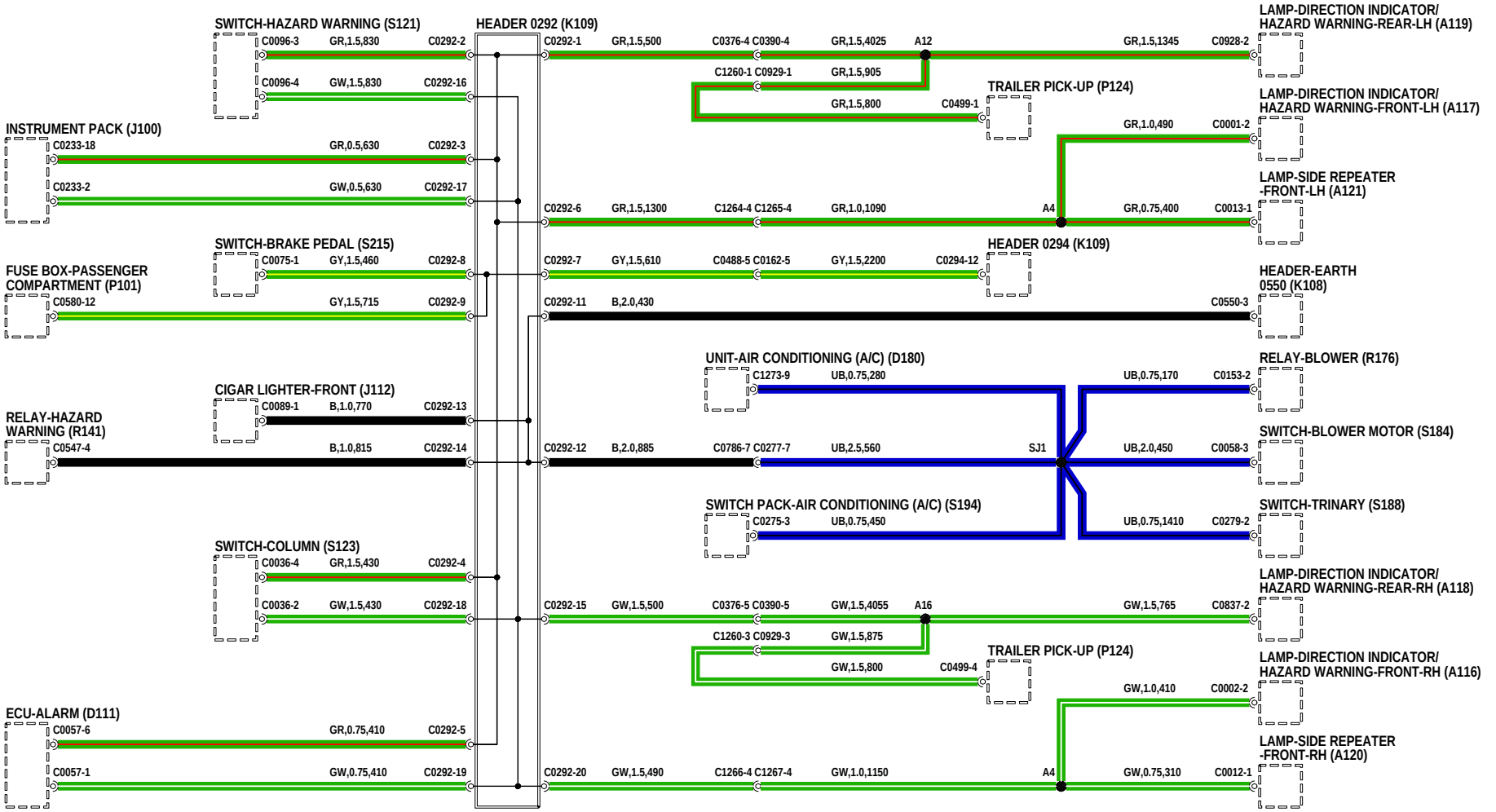
SWITCH-HAZARD WARNING (S121)
HEADER 0292 (K109)
LAMP-DIRECTION INDICATOR/ HAZARD WARNING-REAR-LH (A119)
C0096-3 GR,1.5,830 C0292-2
C0292-1 GR,1.5,500 C0376-4 C0390-4 GR,1.5,4025 A12 GR,1.5,1345 C0928-2
C0096-4 GW,1.5,830 C0292-16
C1260-1 C0929-1 GR,1.5,905
TRAILER PICK-UP (P124)
GR,1.5,800 C0499-1
LAMP-DIRECTION INDICATOR/ HAZARD WARNING-FRONT-LH (A117)
INSTRUMENT PACK (J100)
GR,1.0,490 C0001-2
C0233-18 GR,0.5,630 C0292-3
C0233-2 GW,0.5,630 C0292-17
LAMP-SIDE REPEATER -FRONT-LH (A121)
C0292-6 GR,1.5,1300 C1264-4 C1265-4 GR,1.0,1090 A4 GR,0.75,400 C0013-1
SWITCH-BRAKE PEDAL (S215)
HEADER 0294 (K109)
C0075-1 GY,1.5,460 C0292-8
C0292-7 GY,1.5,610 C0488-5 C0162-5 GY,1.5,2200 C0294-12
FUSE BOX-PASSENGER COMPARTMENT (P101)
HEADER-EARTH 0550 (K108)
C0580-12 GY,1.5,715 C0292-9
C0292-11 B,2.0,430 C0550-3
UNIT-AIR CONDITIONING (A/C) (D180)
RELAY-BLOWER (R176)
C1273-9 UB,0.75,280 UB,0.75,170 C0153-2
CIGAR LIGHTER-FRONT (J112)
C0089-1 B,1.0,770 C0292-13
RELAY-HAZARD WARNING (R141)
SWITCH-BLOWER MOTOR (S184)
C0547-4 B,1.0,815 C0292-14
C0292-12 B,2.0,885 C0786-7 C0277-7 UB,2.5,560 SJ1 UB,2.0,450 C0058-3
SWITCH PACK-AIR CONDITIONING (A/C) (S194)
SWITCH-TRINARY (S188)
C0275-3 UB,0.75,450 UB,0.75,1410 C0279-2
SWITCH-COLUMN (S123)
C0036-4 GR,1.5,430 C0292-4
LAMP-DIRECTION INDICATOR/ HAZARD WARNING-REAR-RH (A118)
C0036-2 GW,1.5,430 C0292-18
C0292-15 GW,1.5,500 C0376-5 C0390-5 GW,1.5,4055 A16 GW,1.5,765 C0837-2
C1260-3 C0929-3 GW,1.5,875
TRAILER PICK-UP (P124)
GW,1.5,800 C0499-4
LAMP-DIRECTION INDICATOR/ HAZARD WARNING-FRONT-RH (A116)
GW,1.0,410 C0002-2
ECU-ALARM (D111)
C0057-6 GR,0.75,410 C0292-5
LAMP-SIDE REPEATER -FRONT-RH (A120)
C0057-1 GW,0.75,410 C0292-19
C0292-20 GW,1.5,490 C1266-4 C1267-4 GW,1.0,1150 A4 GW,0.75,310 C0012-1

SPLICE JOINTS

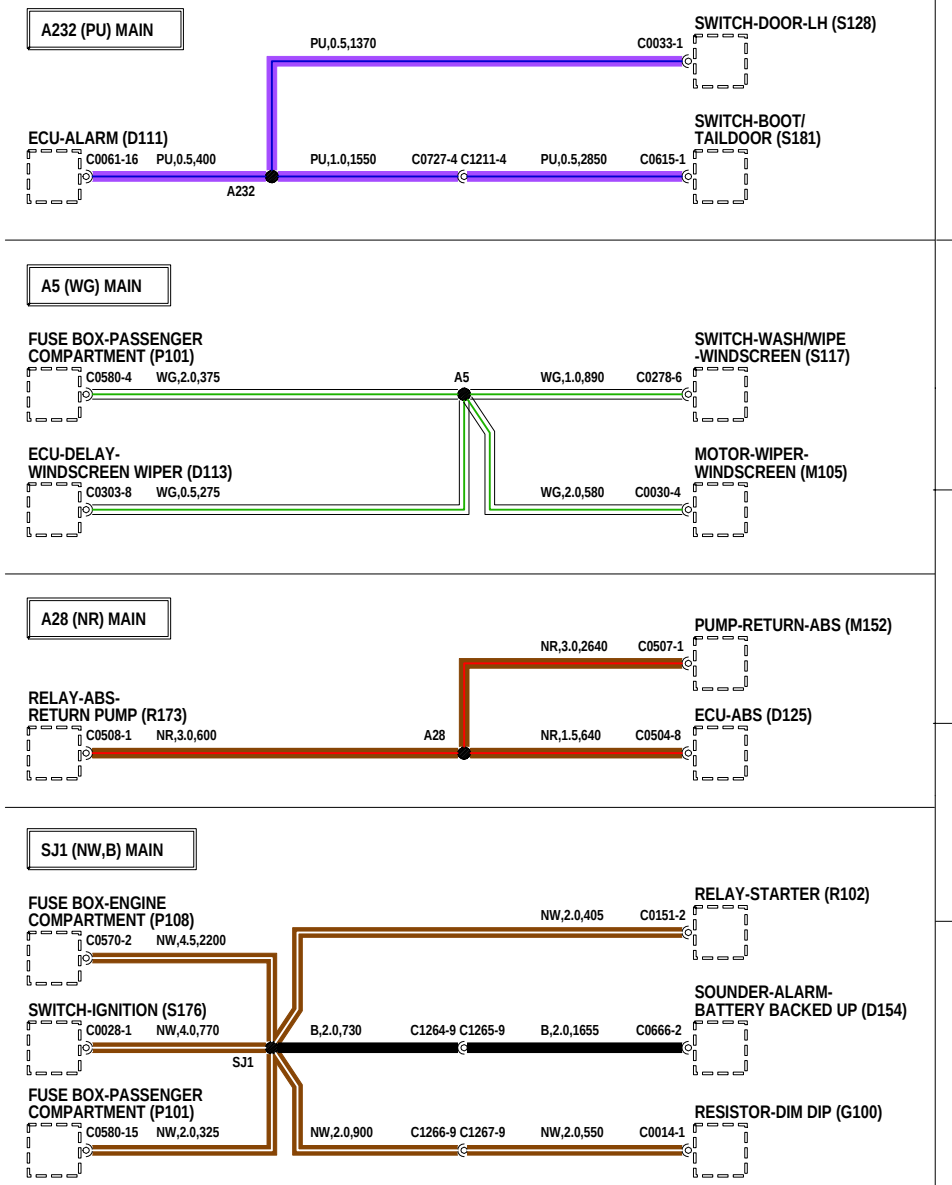

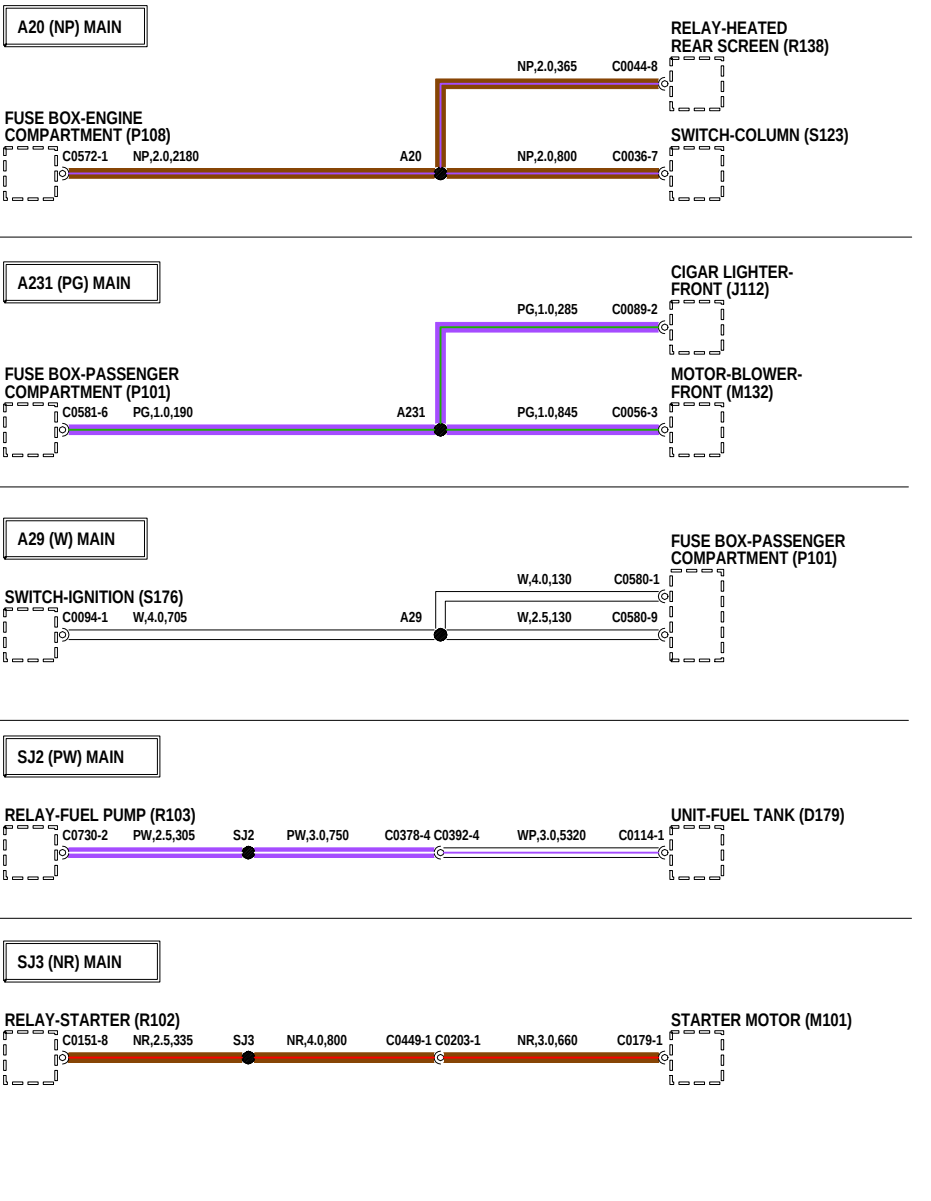

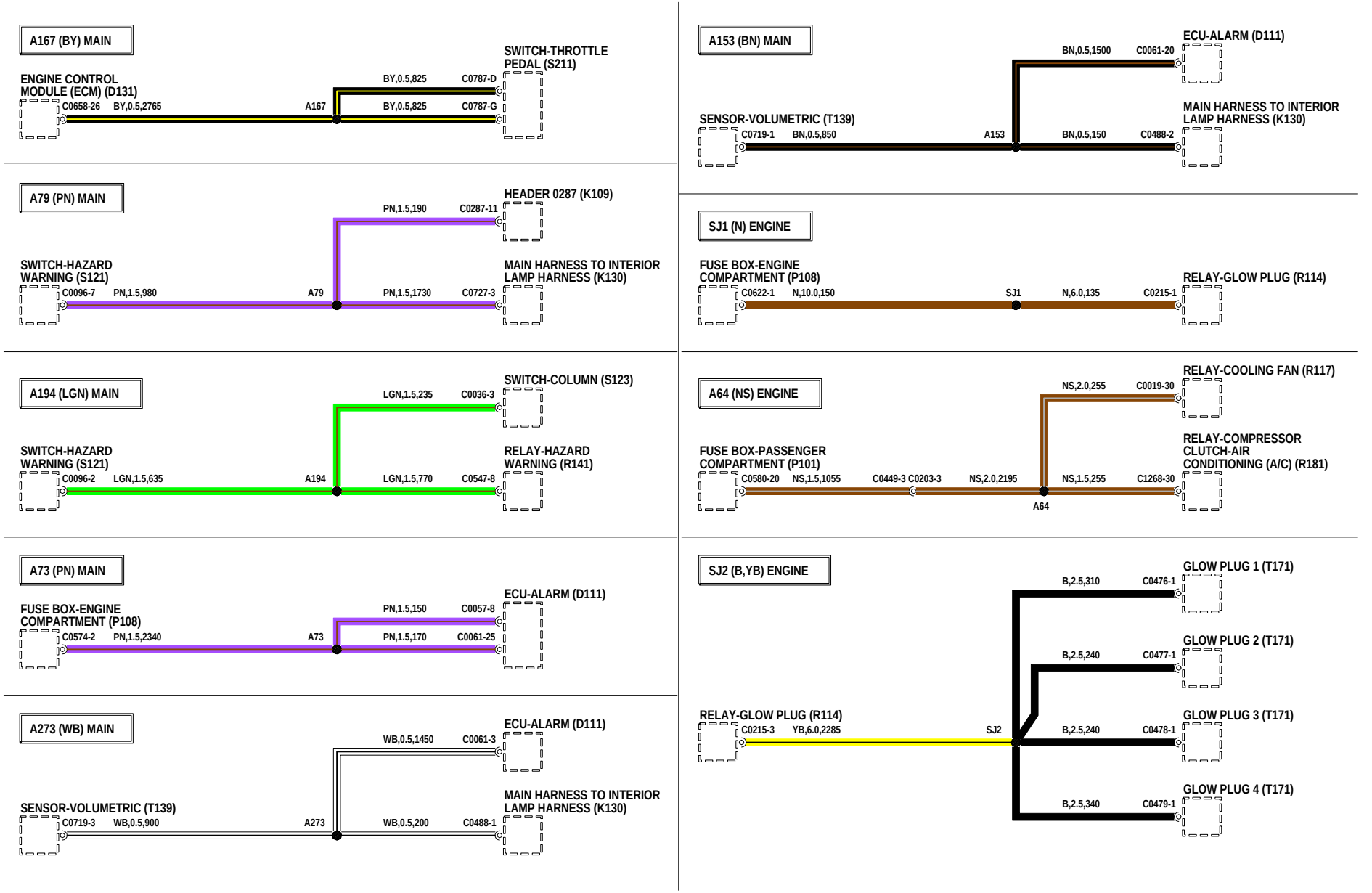
A167 (BY) MAIN
ENGINE CONTROL MODULE (ECM) (D131)
C0658-26
BY,0.5,2765
A167
BY,0.5,825
C0787-D
BY,0.5,825
C0787-G
SWITCH-THROTTLE PEDAL (S211)
A79 (PN) MAIN
SWITCH-HAZARD WARNING (S121)
C0096-7
PN,1.5,980
A79
PN,1.5,190
C0287-11
PN,1.5,1730
C0727-3
HEADER 0287 (K109)
MAIN HARNESS TO INTERIOR LAMP HARNESS (K130)
A194 (LGN) MAIN
SWITCH-HAZARD WARNING (S121)
C0096-2
LGN,1.5,635
A194
LGN,1.5,235
C0036-3
LGN,1.5,770
C0547-8
SWITCH-COLUMN (S123)
RELAY-HAZARD WARNING (R141)
A73 (PN) MAIN
FUSE BOX-ENGINE COMPARTMENT (P108)
C0574-2
PN,1.5,2340
A73
PN,1.5,150
C0057-8
PN,1.5,170
C0061-25
ECU-ALARM (D111)
A273 (WB) MAIN
SENSOR-VOLUMETRIC (T139)
C0719-3
WB,0.5,900
A273
WB,0.5,1450
C0061-3
WB,0.5,200
C0488-1
ECU-ALARM (D111)
MAIN HARNESS TO INTERIOR LAMP HARNESS (K130)
A153 (BN) MAIN
SENSOR-VOLUMETRIC (T139)
C0719-1
BN,0.5,850
A153
BN,0.5,1500
C0061-20
BN,0.5,150
C0488-2
ECU-ALARM (D111)
MAIN HARNESS TO INTERIOR LAMP HARNESS (K130)
SJ1 (N) ENGINE
FUSE BOX-ENGINE COMPARTMENT (P108)
C0622-1
N,10.0,150
SJ1
N,6.0,135
C0215-1
RELAY-GLOW PLUG (R114)
A64 (NS) ENGINE
FUSE BOX-PASSENGER COMPARTMENT (P101)
C0580-20
NS,1.5,1055
C0449-3 C0203-3
NS,2.0,2195
A64
NS,2.0,255
C0019-30
NS,1.5,255
C1268-30
RELAY-COOLING FAN (R117)
RELAY-COMPRESSOR CLUTCH-AIR CONDITIONING (A/C) (R181)
SJ2 (B,YB) ENGINE
RELAY-GLOW PLUG (R114)
C0215-3
YB,6.0,2285
SJ2
B,2.5,310
C0476-1
B,2.5,240
C0477-1
B,2.5,240
C0478-1
B,2.5,340
C0479-1
GLOW PLUG 1 (T171)
GLOW PLUG 2 (T171)
GLOW PLUG 3 (T171)
GLOW PLUG 4 (T171)

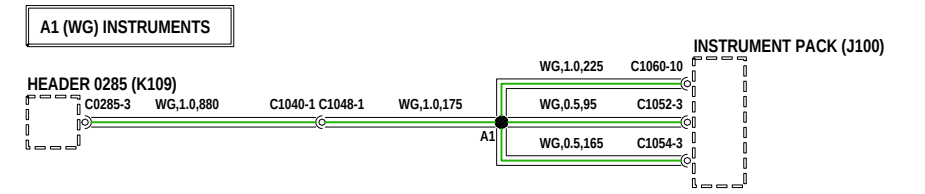
A1 (WG) INSTRUMENTS
HEADER 0285 (K109)
C0285-3
WG,1.0,880
C1040-1 C1048-1
WG,1.0,175
A1
WG,1.0,225
C1060-10
WG,0.5,95
C1052-3
WG,0.5,165
C1054-3
INSTRUMENT PACK (J100)

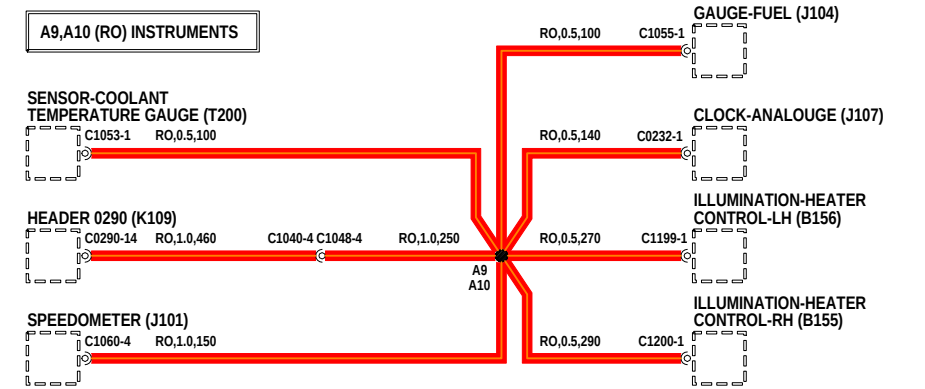
A9,A10 (RO) INSTRUMENTS
SENSOR-COOLANT
TEMPERATURE GAUGE (T200)
C1053-1
RO,0.5,100
HEADER 0290 (K109)
C0290-14
RO,1.0,460
C1040-4 C1048-4
RO,1.0,250
A9
A10
SPEEDOMETER (J101)
C1060-4
RO,1.0,150
RO,0.5,100
C1055-1
GAUGE-FUEL (J104)
RO,0.5,140
C0232-1
CLOCK-ANALOUGE (J107)
RO,0.5,270
C1199-1
ILLUMINATION-HEATER
CONTROL-LH (B156)
RO,0.5,290
C1200-1
ILLUMINATION-HEATER
CONTROL-RH (B155)

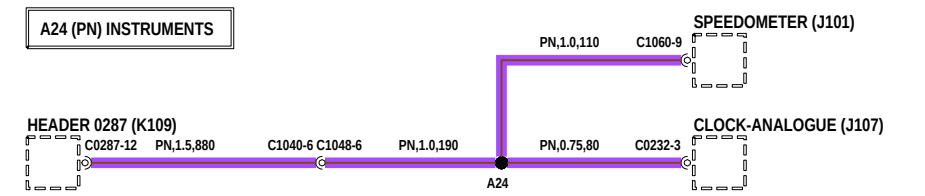
A24 (PN) INSTRUMENTS
HEADER 0287 (K109)
C0287-12
PN,1.5,880
C1040-6 C1048-6
PN,1.0,190
A24
PN,1.0,110
C1060-9
SPEEDOMETER (J101)
PN,0.75,80
C0232-3
CLOCK-ANALOGUE (J107)

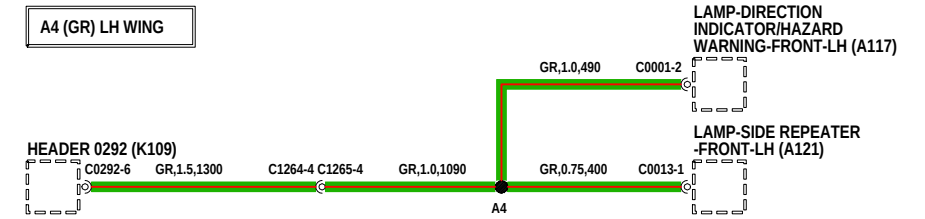
A4 (GR) LH WING
HEADER 0292 (K109)
C0292-6
GR,1.5,1300
C1264-4 C1265-4
GR,1.0,1090
A4
GR,1.0,490
C0001-2
LAMP-DIRECTION
INDICATOR/HAZARD
WARNING-FRONT-LH (A117)
GR,0.75,400
C0013-1
LAMP-SIDE REPEATER
-FRONT-LH (A121)

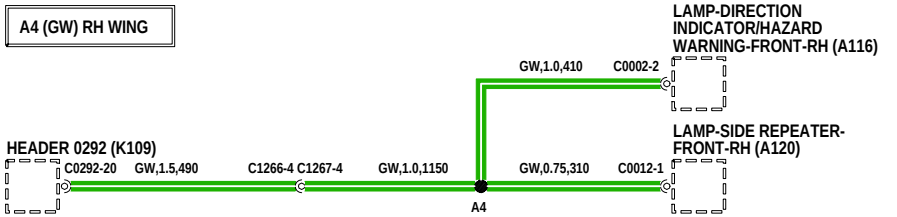
A4 (GW) RH WING
HEADER 0292 (K109)
C0292-20
GW,1.5,490
C1266-4 C1267-4
GW,1.0,1150
A4
GW,1.0,410
C0002-2
LAMP-DIRECTION
INDICATOR/HAZARD
WARNING-FRONT-RH (A116)
GW,0.75,310
C0012-1
LAMP-SIDE REPEATER-
FRONT-RH (A120)

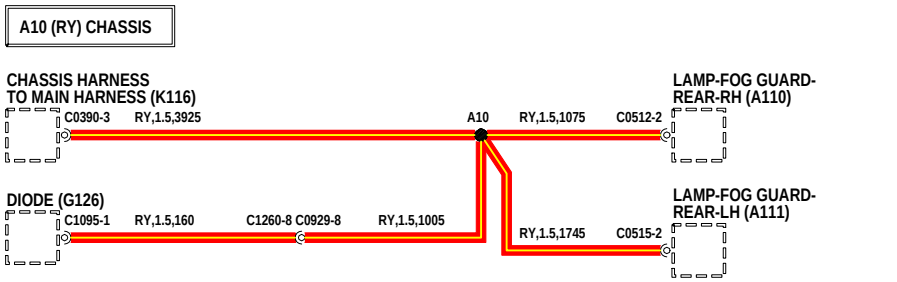
A10 (RY) CHASSIS
CHASSIS HARNESS
TO MAIN HARNESS (K116)
C0390-3
RY,1.5,3925
A10
RY,1.5,1075
C0512-2
LAMP-FOG GUARD-
REAR-RH (A110)
DIODE (G126)
C1095-1
RY,1.5,160
C1260-8 C0929-8
RY,1.5,1005
RY,1.5,1745
C0515-2
LAMP-FOG GUARD-
REAR-LH (A111)

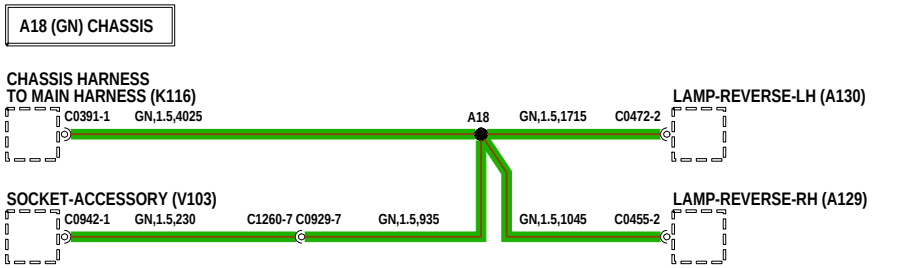
A18 (GN) CHASSIS
CHASSIS HARNESS
TO MAIN HARNESS (K116)
C0391-1
GN,1.5,4025
A18
GN,1.5,1715
C0472-2
LAMP-REVERSE-LH (A130)
SOCKET-ACCESSORY (V103)
C0942-1
GN,1.5,230
C1260-7 C0929-7
GN,1.5,935
GN,1.5,1045
C0455-2
LAMP-REVERSE-RH (A129)

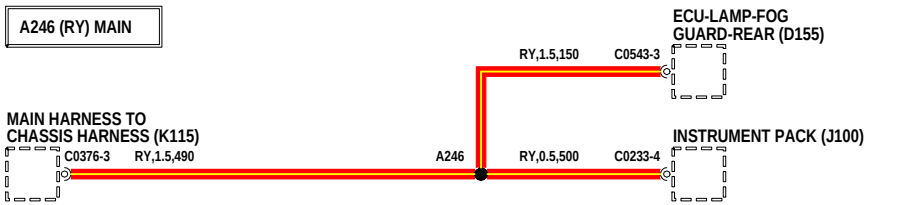
A246 (RY) MAIN
MAIN HARNESS TO
CHASSIS HARNESS (K115)
C0376-3
RY,1.5,490
A246
RY,1.5,150
C0543-3
ECU-LAMP-FOG
GUARD-REAR (D155)
RY,0.5,500
C0233-4
INSTRUMENT PACK (J100)

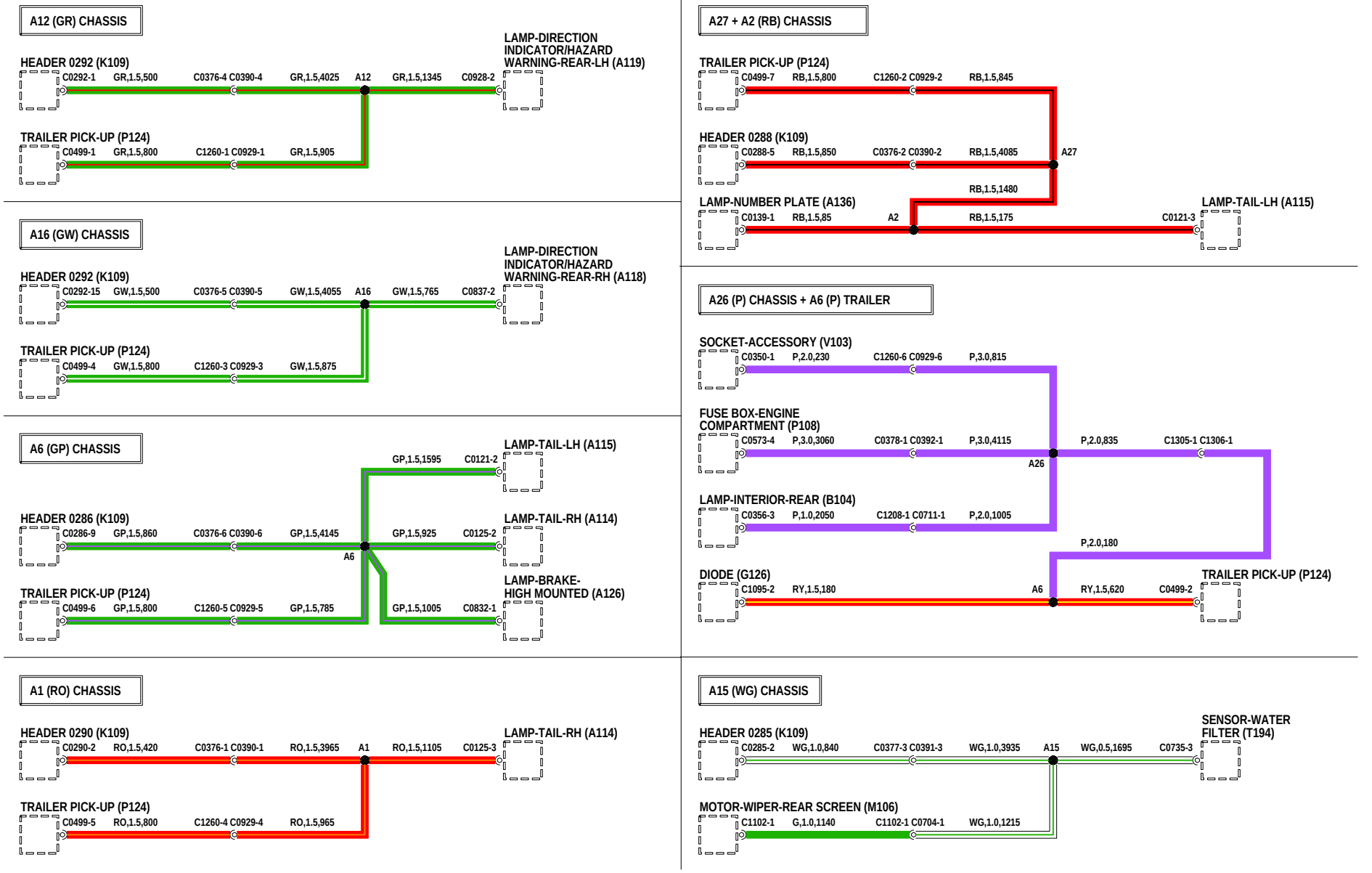
A12 (GR) CHASSIS
HEADER 0292 (K109)
C0292-1 GR,1.5,500 C0376-4 C0390-4 GR,1.5,4025 A12 GR,1.5,1345 C0928-2
LAMP-DIRECTION INDICATOR/HAZARD WARNING-REAR-LH (A119)
TRAILER PICK-UP (P124)
C0499-1 GR,1.5,800 C1260-1 C0929-1 GR,1.5,905
A16 (GW) CHASSIS
HEADER 0292 (K109)
C0292-15 GW,1.5,500 C0376-5 C0390-5 GW,1.5,4055 A16 GW,1.5,765 C0837-2
LAMP-DIRECTION INDICATOR/HAZARD WARNING-REAR-RH (A118)
TRAILER PICK-UP (P124)
C0499-4 GW,1.5,800 C1260-3 C0929-3 GW,1.5,875
A6 (GP) CHASSIS
GP,1.5,1595 C0121-2
LAMP-TAIL-LH (A115)
HEADER 0286 (K109)
C0286-9 GP,1.5,860 C0376-6 C0390-6 GP,1.5,4145 A6 GP,1.5,925 C0125-2
LAMP-TAIL-RH (A114)
TRAILER PICK-UP (P124)
C0499-6 GP,1.5,800 C1260-5 C0929-5 GP,1.5,785 GP,1.5,1005 C0832-1
LAMP-BRAKE-HIGH MOUNTED (A126)
A1 (RO) CHASSIS
HEADER 0290 (K109)
C0290-2 RO,1.5,420 C0376-1 C0390-1 RO,1.5,3965 A1 RO,1.5,1105 C0125-3
LAMP-TAIL-RH (A114)
TRAILER PICK-UP (P124)
C0499-5 RO,1.5,800 C1260-4 C0929-4 RO,1.5,965
A27 + A2 (RB) CHASSIS
TRAILER PICK-UP (P124)
C0499-7 RB,1.5,800 C1260-2 C0929-2 RB,1.5,845
HEADER 0288 (K109)
C0288-5 RB,1.5,850 C0376-2 C0390-2 RB,1.5,4085 A27
RB,1.5,1480
LAMP-NUMBER PLATE (A136)
C0139-1 RB,1.5,85 A2 RB,1.5,175 C0121-3
LAMP-TAIL-LH (A115)
A26 (P) CHASSIS + A6 (P) TRAILER
SOCKET-ACCESSORY (V103)
C0350-1 P,2.0,230 C1260-6 C0929-6 P,3.0,815
FUSE BOX-ENGINE COMPARTMENT (P108)
C0573-4 P,3.0,3060 C0378-1 C0392-1 P,3.0,4115 A26 P,2.0,835 C1305-1 C1306-1
LAMP-INTERIOR-REAR (B104)
C0356-3 P,1.0,2050 C1208-1 C0711-1 P,2.0,1005
P,2.0,180
DIODE (G126)
C1095-2 RY,1.5,180 A6 RY,1.5,620 C0499-2
TRAILER PICK-UP (P124)
A15 (WG) CHASSIS
HEADER 0285 (K109)
C0285-2 WG,1.0,840 C0377-3 C0391-3 WG,1.0,3935 A15 WG,0.5,1695 C0735-3
SENSOR-WATER FILTER (T194)
MOTOR-WIPER-REAR SCREEN (M106)
C1102-1 G,1.0,1140 C1102-1 C0704-1 WG,1.0,1215